PARTS

MANUAL

2016
DEFOLIATOR
3450 6 ROW

Amity
TECHNOLOGY

2800 7TH Avenue North
Fargo, ND 58102

Phone: (701) 232-4199
Fax: (701) 234-1716
www.amitytech.com

TABLE OF CONTENTS

HITCH ASSEMBLY 1-4
DRIVE TRAIN 5-6
#2 FLAILS..... 7-10
#3 FLAILS..... 11-14
FLAIL TUBE ASSEMBLY 15-16
FLAIL TUBE MOUNTING 17-18
SIDE DOORS AND SHIELDS..... 19-20
SIDE PLASTIC ASSEMBLY 21-22
TOP DOOR ASSEMBLY 23-24
TOP DOOR HYDRAULICS 25-26
STEERABLE REAR STRUTS-11.2 X 24 TIRES..... 27-30
SCALPER BAR ASSEMBLY 31-32
SCALPER BASKET 33-34
SCALPER HYDRAULICS..... 35-36
VALVE BLOCK AND MOUNT..... 37-39
SCRAPER MOUNTED ROW FINDER 12ROW..... 41-42
SCALPER MOUNTED ROW FINDER HYDRAULICS..... 43-44
FRAME MOUNTED ROWFINDER..... 45-46
ASSY-ROW FINDER MOUNT..... 47-48
FRAME MOUNTED ROWFINDER HYDRAULICS..... 49-50
HYDRAULIC ROW FINDER..... 51-54
HITCH HYDRAULICS..... 55-56
LIGHT KIT..... 57-58
DECALS..... 59-62
GEARBOX-L TYPE #68065 63-64
GEARBOX-L TYPE W/OVERRRUN CLUTCH #68066..... 65-66
GEARBOX-T TYPE #68067 67-68
GEARBOX-T TYPE #68068..... 69-70
PTO-STD 1.75 71-72
PTO-CV 1.75 73-74
CLUTCH TORQUE LIMITER 75-76
SIDE DRIVELINE 77-78
COUPLER-UNIVERSAL JOINT #68443..... 79-80
SNAP RING PLIERS..... 81

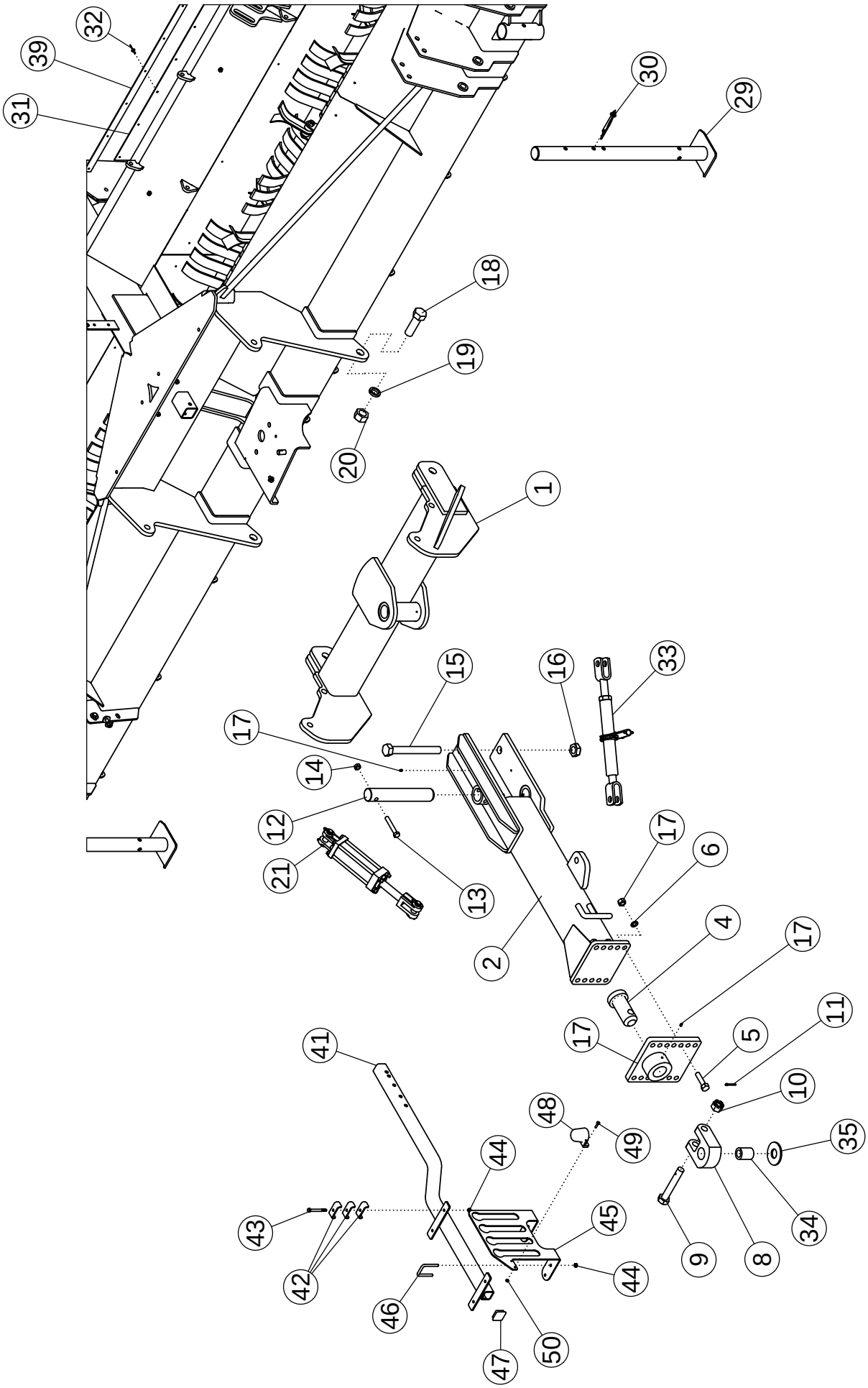
32
39
31
30
29
18
19
20
1
15
16
33
17
14
12
21
13
2
17
6
4
17
17
5
11
10
41
48
49
35
44
43
45
34
9
8
42
44
46
50
47

HITCH ASSEMBLY

ITEM	PART NO.	DESCRIPTION	QTY
1	50341	WLDMT - STD HITCH PIVOT	1
2	68277	WLDMT - DRAWPOLE DEF	1
3	57930	WLDMT-HITCH PLATE	1
4	62101	WLDMT-PIN	1
5	1012059	BOLT-HEX: .75 X 3.00 NC GR5 ZP	6
6	1012061	WASHER-LOCK: .75 ZP	6
7	1011620	NUT-HEX: .75 NC GR2 ZP	6
8	64476	PLATE-PULL HITCH	1
9	62477	BOLT-HITCH DRILLED	1
10	62088	NUT-SLOTTED: 1.13 NC GR5 ZP	1
11	1013473	PIN-COTTER: .19 X 2.00 NP	1
12	50678	PIN	1
13	1015117	BOLT-HEX: .63 X 4.00 NC GR8 ZP	1
14	1016595	NUT-TOPLOCK: .63 NC GR5 ZP	1
15	1030756	BOLT-HEX: 1.25 X 10.50 NC GR5 ZP	1
16	1030759	NUT-TOPLOCK: 1.25 NC ZP	1
17	1011748	ZERK - GREASE	4
18	1030757	BOLT-HEX: 1.38 X 4.25 NC GR5 ZP	2
19	1030760	WASHER-LOCK: 1.38 ZP	2
20	1030758	NUT-HEX: 1.38 NC ZP	2
21	58891	CYLINDER-HYDRAULIC 4 X 8" 3000	2
	301315	SEAL KT-CYL 4 X 8, 4 X 10 3000PSI UNIVERSAL	
22	63995	TOP_BRACKET - RH	1
23	63996	TOP_BRACKET - LH	1
24	63383	POLY GUIDE BLOCK	1
25	63999	WLDMT - BOTTOM_BRACKET	1
26	1016211	BOLT-HEX: .25 X 2.00 NC GR5	4
27	1030946	NUT-TOPLOCK: .25 NC GR5 ZP	4
28	63359	COLLAR-SET: .563 ZP	1
29	52073	WLDMT-STAND	2
30	52408	SPRING PIN .50 X 3.50	2
31	305226	LINER-FRONT 12R 3750	4
	305491	LINER-FRONT 8R 3550	2
	306183	LINER-FRONT 6R 3450	2
32	56886	RIVET-POP: .19 X .675 ZP	AR
33	52407	RATCHET JACK-PAINTED	1
34	64615	TUBE-SPACER 2.0 X 1.25	1
	64614	TUBE-SPACER 2.0 X 1.63	
35	58925	WASHER-HARDENED: 4.00 X 1.63	1
	68645	WASHER-FLAT: SPCL 2.125 X 4.50 X .184	
36	63406	PIN-CLEVIS: 1.00 X 4.00 ZP	1
37	52248	DECAL-CAUTION	1

CONTINUED

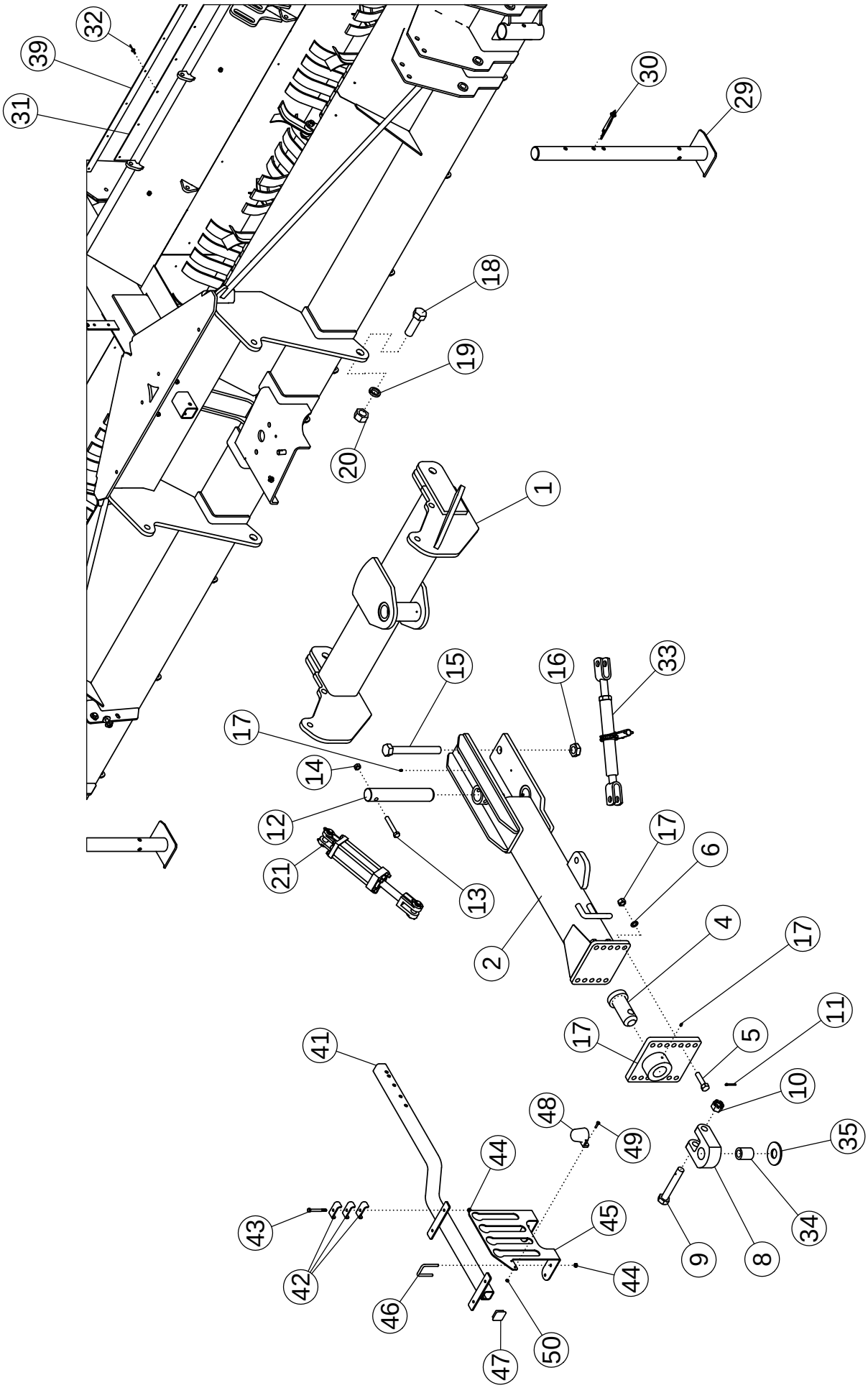
32
39
31
30
29
18
19
20
1
15
16
33
17
14
12
21
13
2
17
6
4
17
17
5
11
10
41
48
49
35
44
43
45
34
9
8
42
44
46
47
50

HITCH ASSEMBLY (CONTINUED)

ITEM	PART NO.	DESCRIPTION	QTY
38	63405	DECAL-DEPTH GAUGE	1
39	305227	BAR-LINER RETAINER 12R 3750	4
	305492	BAR-LINER RETAINER 8R 3550	2
	306236	BAR-LINER RETAINER 8R SPLIT-FRM	2
	306184	BAR-LINER RETAINER 6R 3440	2
40	58090	SAFETY CHAIN 20200# (NOT SHOWN)	1
41	301210	WLDMT-HYD HOSE HOLDER	1
42	50714	CLAMP 1/2" ZP	12
43	58176	BOLT-HEX: .38 X 3.50 NC GR5 ZP	4
44	1016999	NUT-TOPLOCK: .38 NC GR5 ZP	8
45	301212	PLATE-HYD HOSE END HOLDER	1
46	33162	U-BOLT: .375 X 3 X 2 X 3	2
47	301129	CAPLUG-2" SQ .188WA	1
48	223329	HOLDER-LIGHT PLUG	1
49	1013423	BOLT-HEX: .25 X 1.00 NC GR5 ZP	2
50	1030946	NUT-TOPLOCK: .25 NC GR5 ZP	2

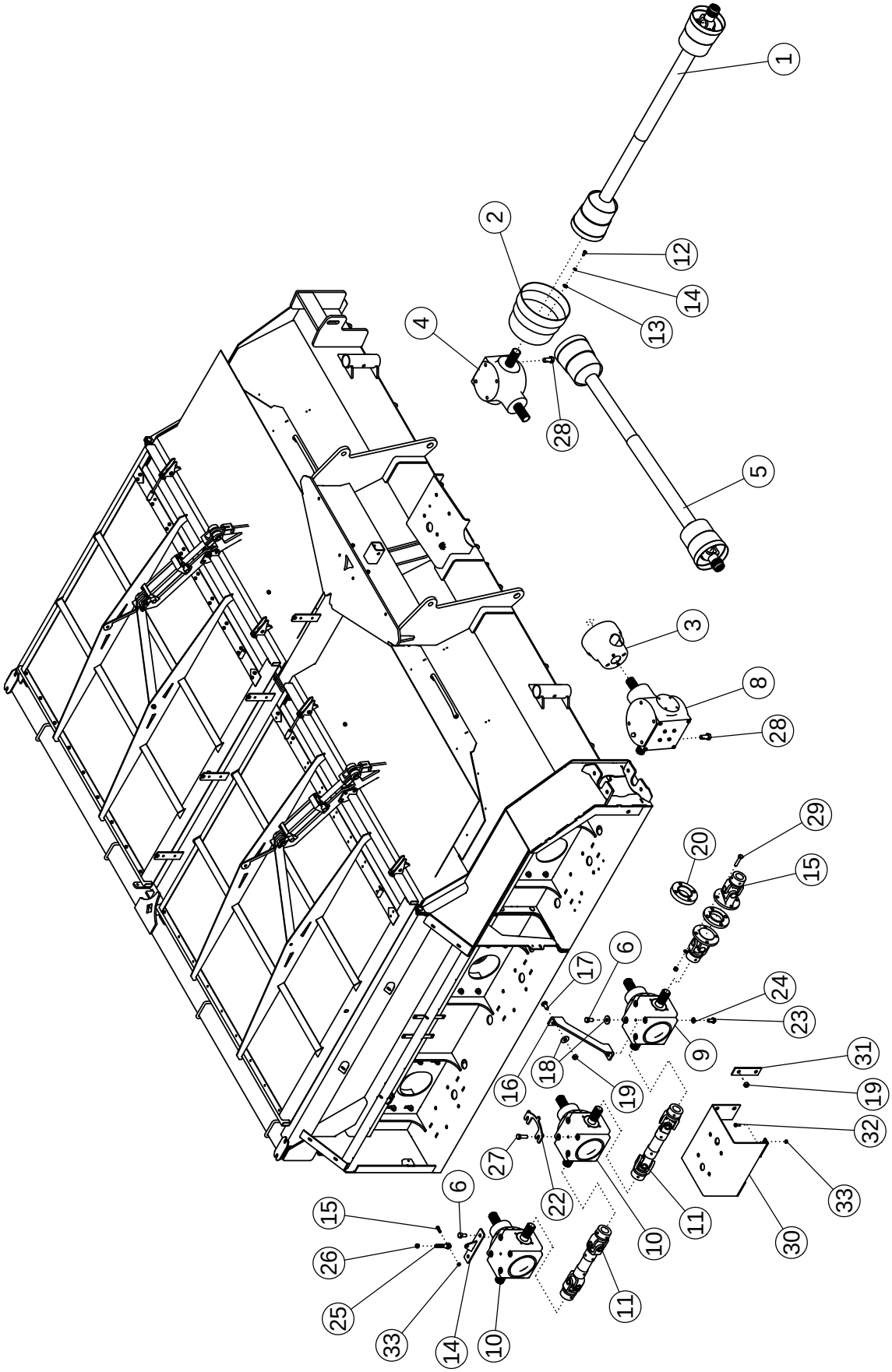
1
2
12
14
13
4
28
5
3
8
28
29
20
15
6
17
24
23
9
31
19
18
16
19
32
27
22
33
6
15
11
10
30
26
25
33
14
10
11

DRIVE TRAIN

ITEM	PART NO.	DESCRIPTION	QTY
1	69679	PTO-STD 1-3/8"-21 (DEF)	1
	69680	PTO-STD 1-3/4"-20 (DEF)	
	69681	PTO-CV 1-3/8"-21 (DEF)	
	69682	PTO-CV 1-3/4"-20 (DEF)	
2	52389	SHIELD CONE-LARGE	1
3	63972	SHIELD-CONE SMALL DRILLED	2
4	68065	GEARBOX-S2125 1.35:1 L (BLACK)	1
5	306416	CROSS SHAFT - 6R	1
6	68449	BOLT-HEX: M16 X 2.0 X L30	24
7	1011813	WASHER-LOCK: .63 ZP	22
8	68066	GEARBOX-S2125 1.35:1 L W/OVR RN CLU (BLACK)	1
9	68068	GEARBOX-S2125 1:1.93 T (BLACK)	1
10	68067	GEARBOX-S2125 1.35:1 T (BLACK)	2
11	52397	DRIVELINE-SIDE	2
12	68450	BOLT-HEX: M10 X 1.5 X L20	12
13	1011828	WASHER-FLAT: .38 ZP	12
14	1011586	WASHER-LOCK: .38 ZP	12
15	68443	COUPLER-U-JOINT	1
16	68970*	PLATE-GEARBOX SUPPORT	2
17	72063*	BOLT-CRG: .63 X 1.50 NC GR5 ZP	2
18	1013024*	WASHER-FLAT: .63 ZP	4
19	1016595*	NUT-TOPLOCK: .63 NC GR5 ZP	2
20	305154	PLATE-SPACER COUPLER 90 DEG	1
21	305618	PLATE-ADJUSTABLE GEARBOX	1
22	305626	PLATE-GEARBOX SPACER	8
23	305647	BOLT-HEX: M16 X 2.0 X L30 DIN 933-8.8	8
24	1011813	WASHER-LOCK: .63 ZP	8
25	305614	BOLT-CLEVIS .5"	1
26	1013429	NUT-CENTERLOCK: .50 NF GR5 ZP	1
27	305625	BOLT-HEX: M16 X 2.0 X L50 CL8.8 ZP	4
28	305646	BOLT-HEX: M20 X 2.5 X L45 CL8.8 ZP NDP	4
29	305192	BOLT-HEX: .56 X 3.00 NC GR5 ZP	4
30	306095	WLDMT-GEARBOX BRACE	1
31	306096	PLATE-GEARBOX BRACE BACKING	2
32	1011600	BOLT-HEX: .38 X 1.00 NC GR5 ZP	4
33	1016999	NUT-TOPLOCK: .38 NC GR5 ZP	4

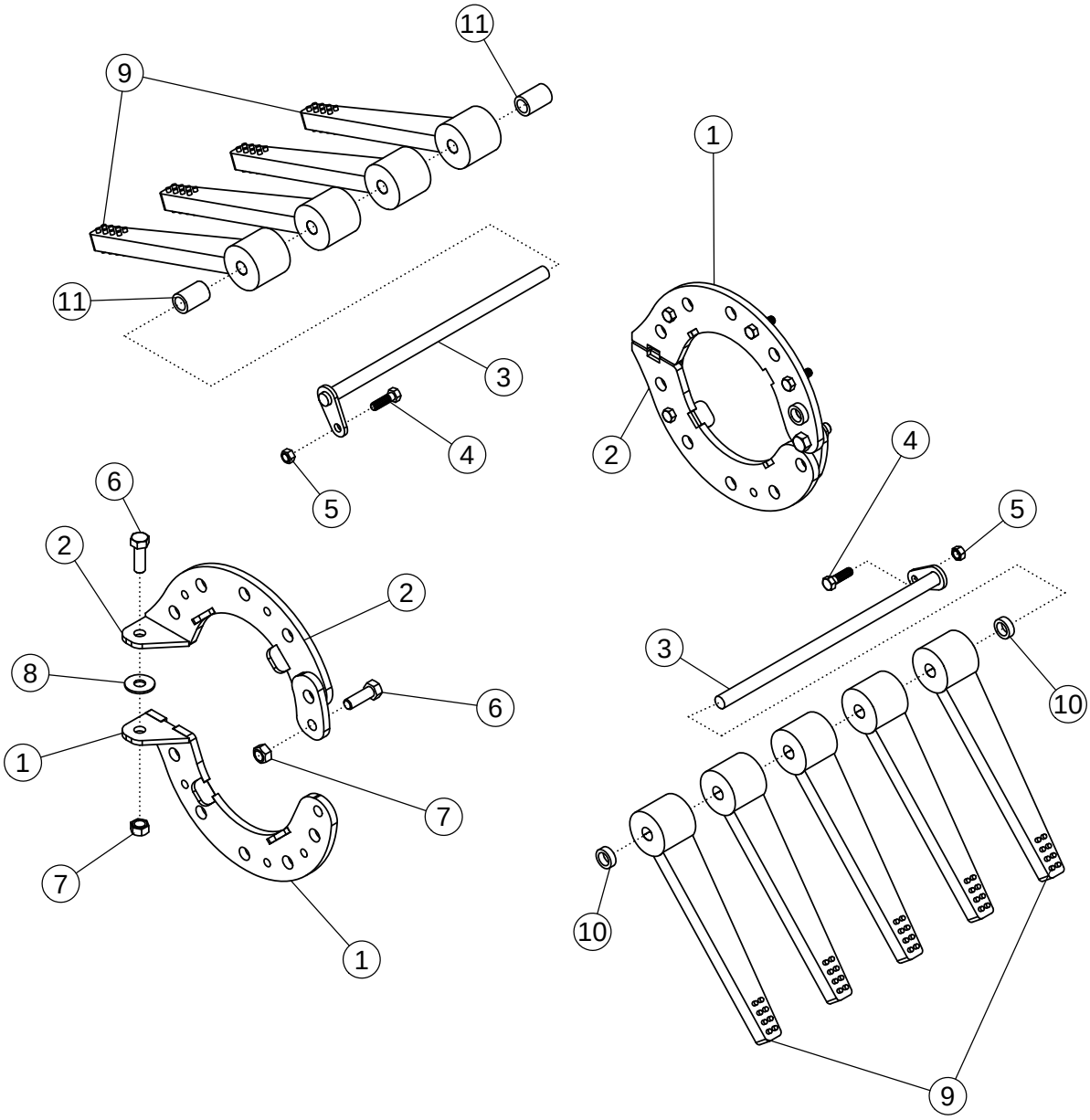
11
9
1
11
3
4
2
5
4
6
5
2
2
3
8
6
10
1
7
7
10
1
9

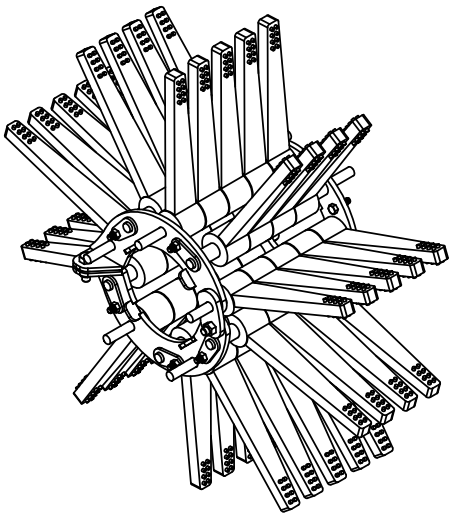

ASSY-FLAIL #2 10 ROD #305696

ITEM	PART NO.	DESCRIPTION	QTY
1	305522	WLDMT-FLAIL RING 10 ROD	2
2	305523	WLDMT-FLAIL RING 10 ROD	2
3	305499	WLDMT-10 FLAIL ROD	10
4	1011601	BOLT-HEX: .38 X 1.25 NC GR5 ZP	10
5	1016999	NUT-TOPLOCK: .38 NC GR5 ZP	10
6	1011607	BOLT-HEX: .50 x 1.50 NC GR5 ZP	4
7	1027461	NUT-TOPLOCK: .50 NC GR5 ZP	4
8	1014443	WASHER-FLAT: .50 ZP	2
9	52354	FLAIL-RUBBER 1 X 12 (PREMIER)	45
10	51547	SPACER-SHORT	10
11	51548	SPACER-LONG	10

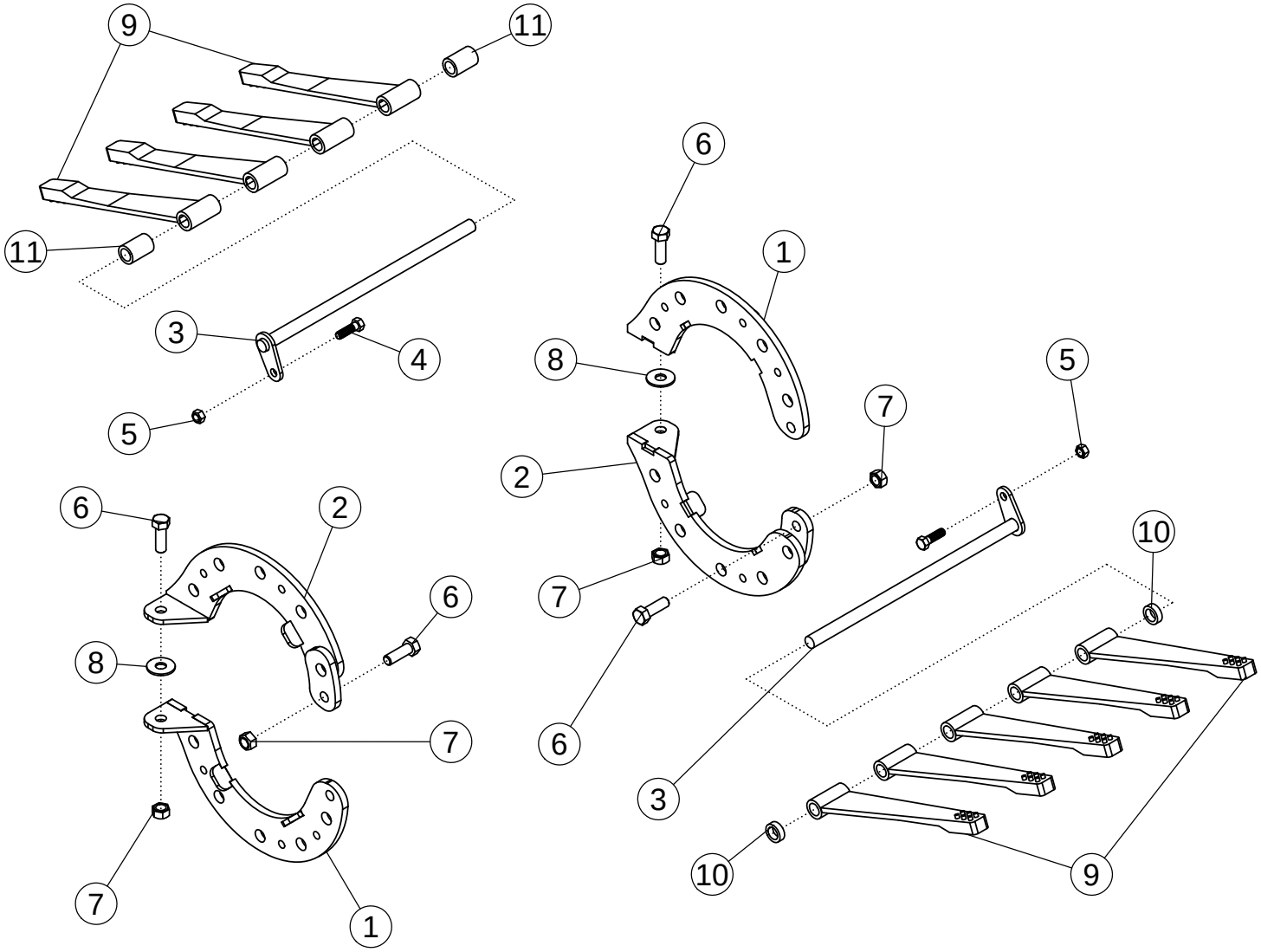
9
11
11
3
4
5
6
2
8
7
1
6
1
8
2
7
5
7
6
10
3
10
9

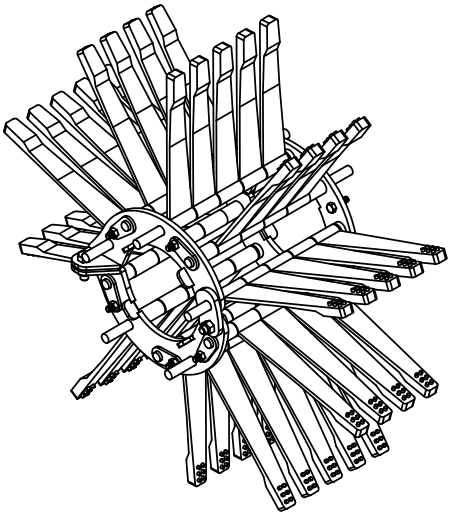

ASSY FLAIL #2 ROD #305776

ITEM	PART NO.	DESCRIPTION	QTY
1	305522	WLDMT-FLAIL RING 10 ROD	2
2	305523	WLDMT-FLAIL RING 10 ROD	2
3	305499	WLDMT-10 FLAIL ROD	10
4	1011601	BOLT-HEX: .38 X 1.25 NC GR5 ZP	10
5	1016999	NUT-TOPLOCK: .38 NC GR5 ZP	10
6	1011607	BOLT-HEX: .50 x 1.50 NC GR5 ZP	4
7	1027461	NUT-TOPLOCK: .50 NC GR5 ZP	4
8	1014443	WASHER-FLAT: .50 ZP	2
9	52356	FLAIL-STUDDED 1 X 12	45
10	51547	SPACER-SHORT	10
11	51548	SPACER-LONG	10

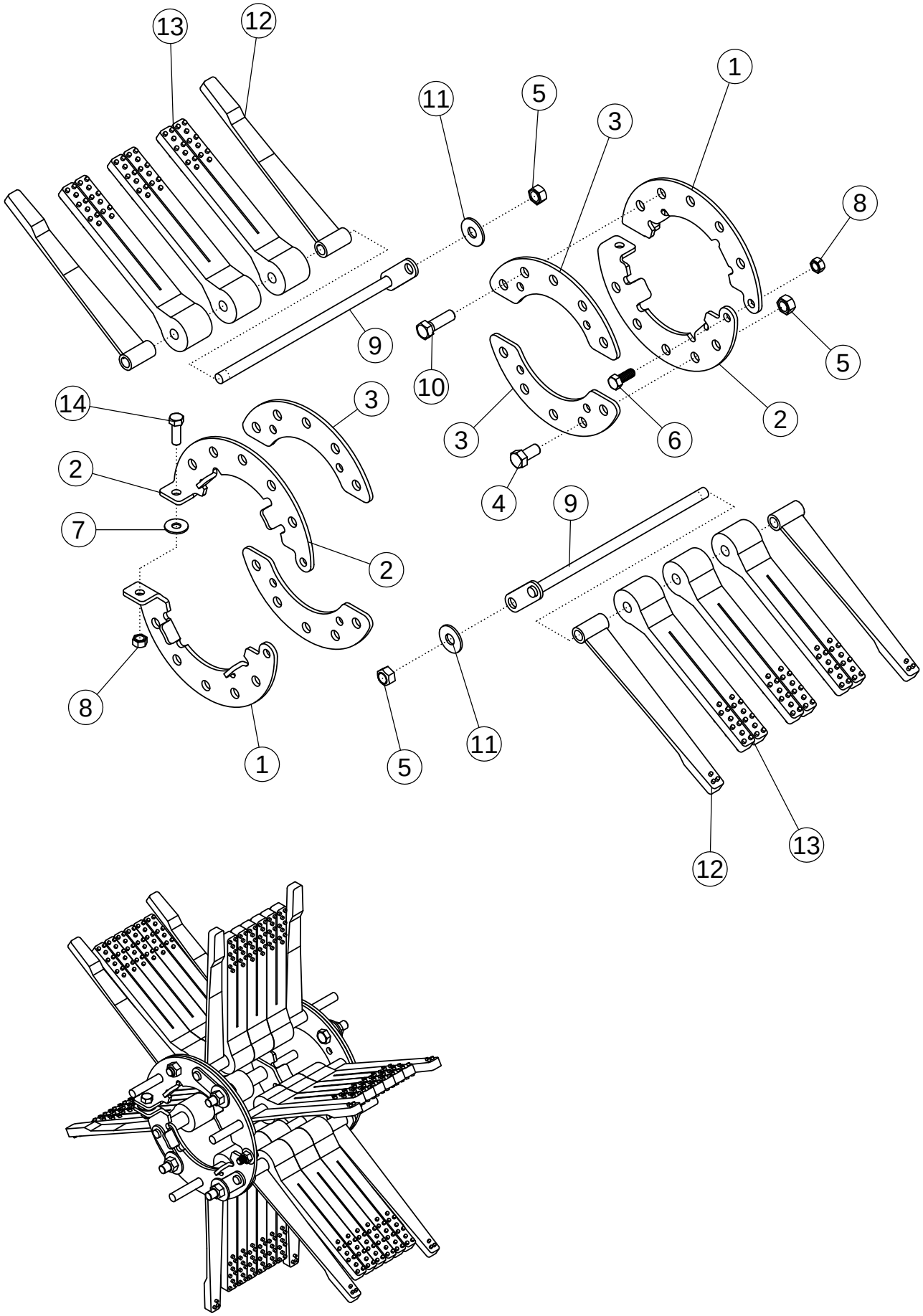
13
12
11
5
1
3
8
9
10
5
14
3
2
3
6
2
2
4
7
9
2
8
1
5
11
12
13

FLAILS ON #3 DRUM

ITEM	PART NO.	DESCRIPTION	QTY
1	52062	FLAIL RING-LH	2
2	52061	FLAIL RING-RH	2
3	58084	PLATE-REINFORCEMENT ZP	4
4	1032509	BOLT-HEX: .63 X 1.25 NC GR5 ZP	2
5	1016595	NUT-TOPLOCK: .63 NC GR5 ZP	8
6	1011606	BOLT-HEX: .50 X 1.25 NC GR5 ZP	2
7	1014443	WASHER-FLAT: .50 ZP	2
8	1027461	NUT-TOPLOCK: .50 NC GR5 ZP	4
9	305557	FLAIL ROD	6
10	1011623	BOLT-HEX: .63 X 2.00 NC GR5 ZP	6
11	1013024	WASHER-FLAT: .63 ZP	6
12	52355	FLAIL-SWEEP 1 X 13-1/4	12
13	58255	FLAIL-SPLIT TAPER 2 X 12	18
	52356	FLAIL-STUDDED 1 X 12	18
14	1011607	BOLT-HEX: .50 X 1.50 NC GR5 ZP	2

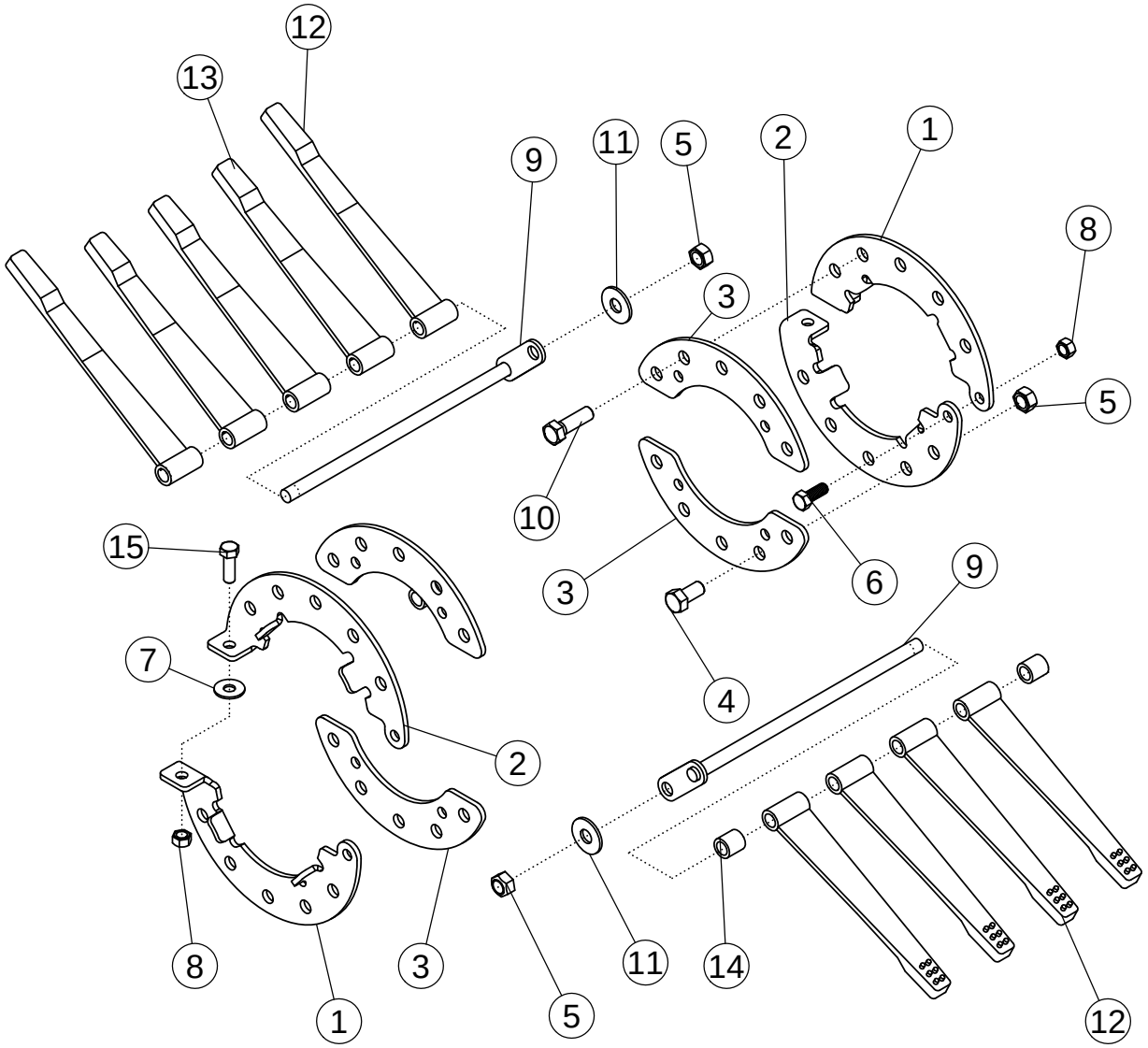
12
13
9
11
5
2
1
8
3
5
10
15
3
6
9
7
4
2
8
3
11
14
1
5
12

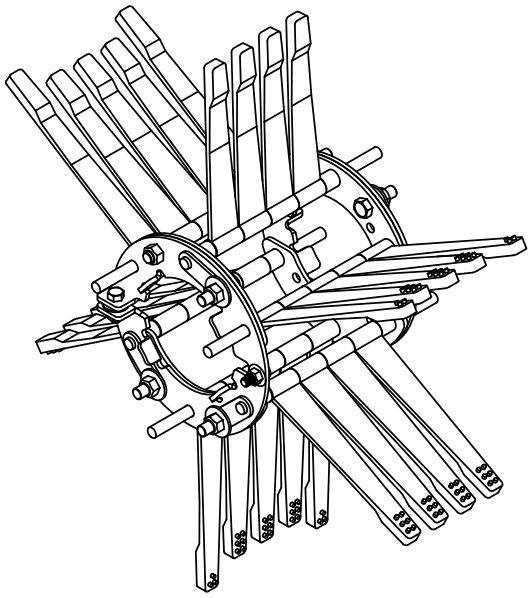

FLAILS ON #3 DRUM

ITEM	PART NO.	DESCRIPTION	QTY
1	52062	FLAIL RING-LH	2
2	52061	FLAIL RING-RH	2
3	58084	PLATE-REINFORCEMENT ZP	4
4	1032509	BOLT-HEX: .63 X 1.25 NC GR5 ZP	2
5	1016595	NUT-TOPLOCK: .63 NC GR5 ZP	8
6	1011606	BOLT-HEX: .50 X 1.25 NC GR5 ZP	2
7	1014443	WASHER-FLAT: .50 ZP	2
8	1027461	NUT-TOPLOCK: .50 NC GR5 ZP	4
9	305557	FLAIL ROD	6
10	1011623	BOLT-HEX: .63 X 2.00 NC GR5 ZP	6
11	1013024	WASHER-FLAT: .63 ZP	6
12	52355	FLAIL-SWEEP 1 X 13-1/4	6
13	52354	FLAIL-RUBBER 1 X 12 (PREMIER)	21
14	51548	SPACER 1"	6
15	1011607	BOLT-HEX: .50 X 1.50 NC GR5 ZP	2

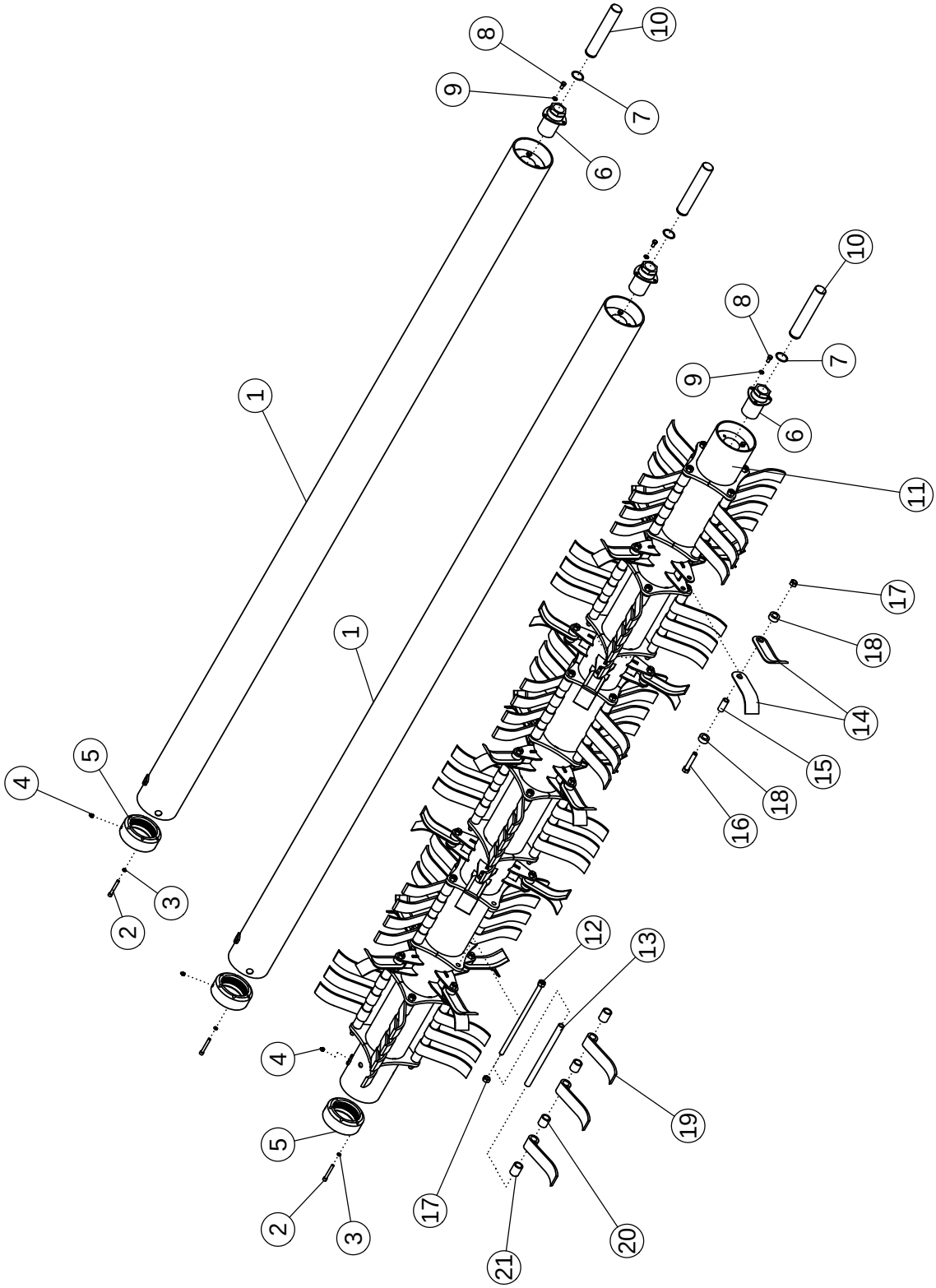
1
1
2
2
3
3
4
4
5
5
6
6
7
7
8
8
9
9
10
10
11
12
13
14
14
15
16
17
17
18
18
19
20
21

FLAIL TUBE ASSEMBLY

ITEM	PART NO.	DESCRIPTION	QTY
1	306114	FLAIL TUBE - 0622 TT (COMPLETE)	2
2	68417	SCREW: S-H-CAP .38 X 2.75 NC	24
3	68418	WASHER-LOCK: .38 HIGH COLLAR	24
4	1030766	ZERK-GREASE: .13 NPT	4
5	68412	DRIVE SLEEVE	4
6	64163	TRANTORQUE: 1.750" X 3.375"	4
7	64184	RING-RETAINING 1.750"	4
8	1011599	BOLT-HEX: .38 X .75 NC GR5 ZP	12
9	1011586	WASHER-LOCK: .38 ZP	12
10	68445	SHAFT-IDLER	3
11	306119	ASSY-STL DRUM 0622 HS (COMPLETE)	1
	306126	ASSY-STL DRUM 0624 HS (COMPLETE)	
12	305502	WLDMT-FLAIL ROD CUP 16.375"	24
13	305503	BUSHING-FLAIL 12.688"	24
14	58680	FLAIL-STEEL	40
15	68427	BUSHING-L KNIFE	20
16	65825	BOLT-HEX: .63 X 3.25 NC GR5 ZP	20
17	1016595	NUT-TOPLOCK: .63 NC GR5 ZP	44
18	68426	SPACER- L KNIFE	40
19	68479	FLAIL-CUP 8"	84
20	68546	SPACER 1.45"	60
21	68547	SPACER 1.70"	24

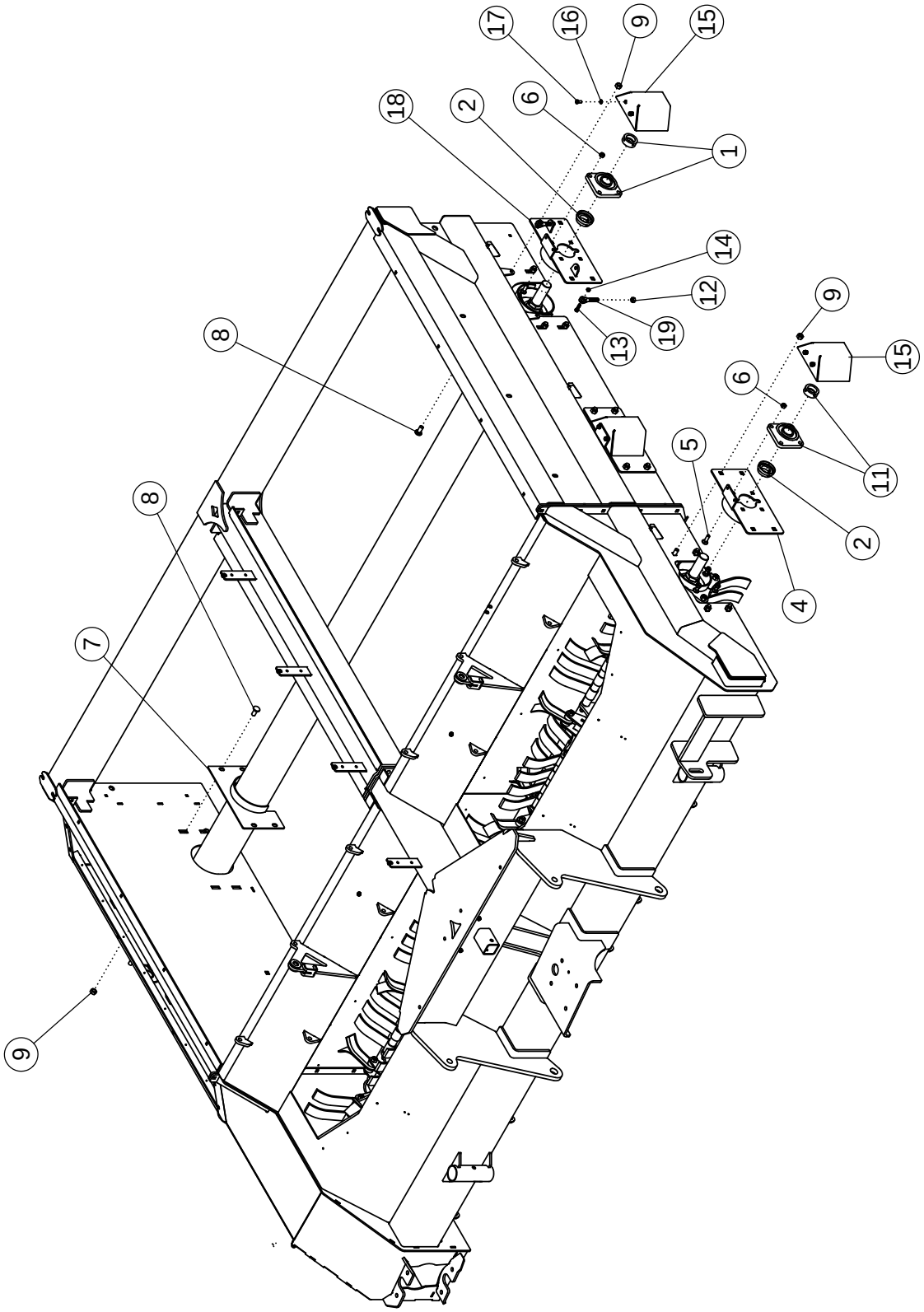
17
16
9
15
18
2
6
1
14
12
19
13
8
9
15
6
5
11
8
2
4
7
9

FLAIL TUBE MOUNTING

ITEM	PART NO.	DESCRIPTION	QTY
1	52404	BEARING-FLANGE 1.75	4
2	52382	SEAL PROTECTOR 1.75	6
3	52383*	LOCK PROTECTOR 1.75	3
4	68244	WLDMT-BEARING PLATE	3
5	1011660	BOLT-CRG: .50 X 1.50 NC GR5 ZP	12
6	1027461	NUT-TOPLOCK: .50 NC GR5 ZP	24
7	51809	WLDMT-SHIELD ANTI WRAP NARROW	3
8	72063	BOLT-CRG: .63 X 1.50 NC GR5 ZP	24
9	1016595	NUT-TOPLOCK: .63 NC GR5 ZP	24
10	1011609	BOLT-HEX: .50 X 2.00 NC GR5 ZP	12
11	63506	BEARING-FLANGE 1.75 N-SEAL	2
12	1011500	NUT-CENTERLOCK: .50 NC GR2 ZP	4
13	1011601	BOLT-HEX: .38 X 1.25 NC GR5 ZP	4
14	1016999	NUT-TOPLOCK: .38 NC GR5 ZP	4
15	68462	WLDMT-IDLER SHIELD	3
16	1011586	WASHER-LOCK: .38	6
17	1011599	BOLT-HEX: .38 X .75 NC GR5 ZP	6
18	305624	WLDMT-BEARING PLATE ADJ	1
19	305614	BOLT-CLEVIS .50"	4

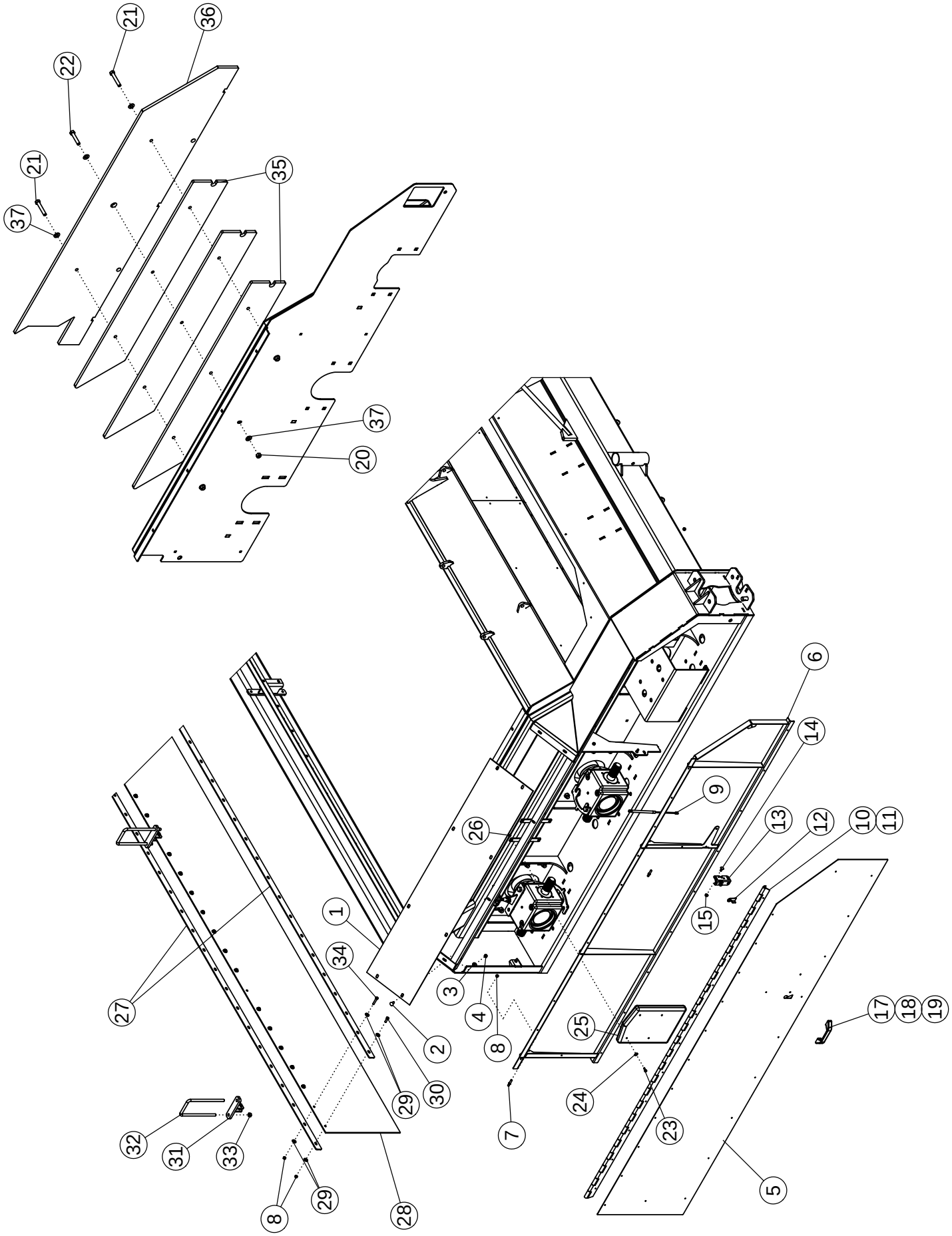
21
36
22
21
35
37
37
20
6
14
9
26
13
12
10
11
1
15
34
3
4
8
27
2
25
17
18
19
29
30
24
23
32
31
33
7
5
8
29
28

SIDE DOOR AND SHIELDS

ITEM	PART NO.	DESCRIPTION	QTY
1	305233	SHEET-TOP SHIELD	1
2	59488	BOLT-CRG: .38 X 1.00 C R5 ZP	8
3	1011828	WASHER-FLAT: .38 ZP	8
4	1016999	NUT-TKOPLOCK: .38 NC GR5 ZP	8
5	305234	SHEET-DIDE DOOR 12R	1
6	305235	WLDMT-DOOR FRAME 12R	1
7	69278	STUD-BALL 5/16-18 NC X .75	4
8	1030700	NUT-TOPLOCK: .31 NC GR5 ZP	50
9	305225	SPRING-GAS SHOCK 150LB 8" STROKE	2
10	305224	HINGE-HEAVY CONTINUOUS	1
11	1011974	RIVET-POP: .19 X .550 ZP	34
12	69284	LEVER-HRV LATCH ZP	1
13	69283	LATCH -ROTARY	1
14	65702	BOLT-CRG: .31 X 0.75 NC GR5 ZP	2
15	67077	NUT-FLANCE: SERR .31 NC ZP GR2	4
16	1029448	BOLT-HEX: .31 X 3.00 NC GR5 ZP	1
17	69285	HANDLE-MOLDED GRAB	1
18	67078	SCREW-P-H: 10-24 X .75 N CGR2 ZP	2
19	1026591	NUT-K-LOCK: 10-24 N CGR2 ZP	2
20	1016595	NUT-TOPLOCK: .63 NC GR5 ZP	3
21	59093	BOLT-HEX: .63 X 3.75 NC GR5 ZP	2
22	65825	BOLT-HEX: .63 X 3.25 NC GR5 ZP	1
23	1011595	BOLT-HEX: .25 X .75 NC GR5 ZP	4
24	1020416	WASHER-FLAT: .25 ZP	4
25	64635	CASE-MANUAL STORAGE	1
26	1030946	NUT-TOPLOCK: .25 NC GR5 ZP	
27	63446	BAR-REAR FLAP 6R	4
28	52357	FLAP-REAR 6R	2
29	1011583	WASHER-FLAT: .31 ZP	38
30	1011598	BOLT-HEX: .31 X 1.00 NC GR5 ZP	19
31	63448	WLDMT-REAR FLAP MOUNT	4
32	63458	U-BOLT: .500 X 9.25 X 4 X 9.25	4
33	1027461	NUT-TOPLOCK: .50 NC GR5 ZP	8
34	1013424	BOLT-HEX: .31 X 1.75 NC GR5 ZP	4
35	306235	PLATE-WEIGHT DEF SPLIT-FRAME	3
36	305798	PLATE-WEIGHT OUTER DEF	1
37	1013004	WASHER-FLAT: SAE .63 ZP	6

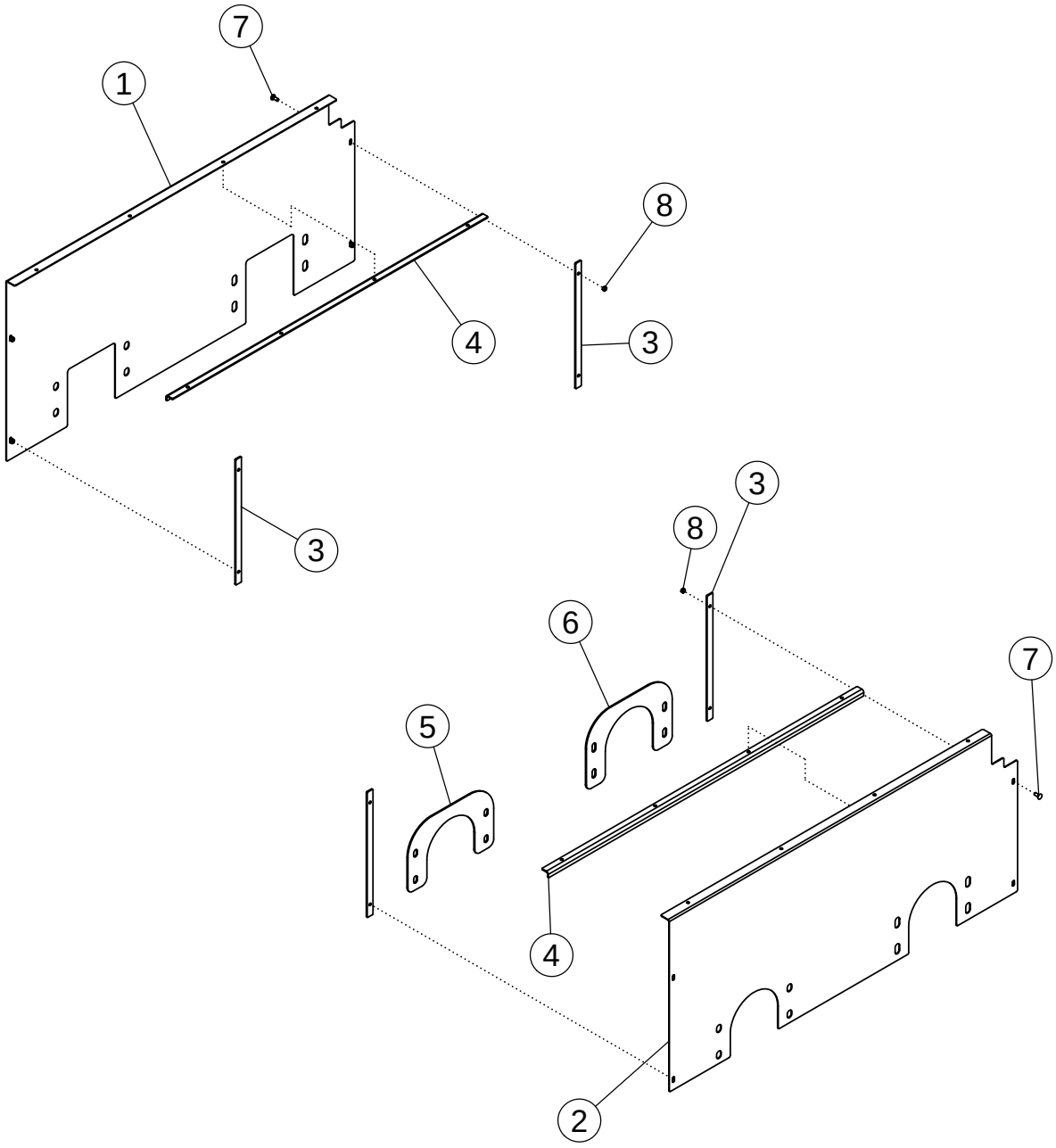
7
1
8
4
3
3
3
8
6
7
5
4
2

SIDE PLASTIC ASSY

ITEM	PART NO.	DESCRIPTION	QTY
1	305283	LINER-RH 3750 DEF PLASTIC	1
2	305284	LINER-LH 3750 DEF PLASTIC	1
3	69968	PLATE-RETAINER VERT	4
4	305286	PLATE- TOP RETAINER	2
5	69969	PLATE-LH LOWER RETAINER	1
6	305285	PLATE-LH LOWER REAR RETAINER	1
7	59488	BOLT-CRG: .38 X 1.00 NC GR5 ZP	16
8	1016999	NUT-TOPLOCK: .38 NC GR5 ZP	16

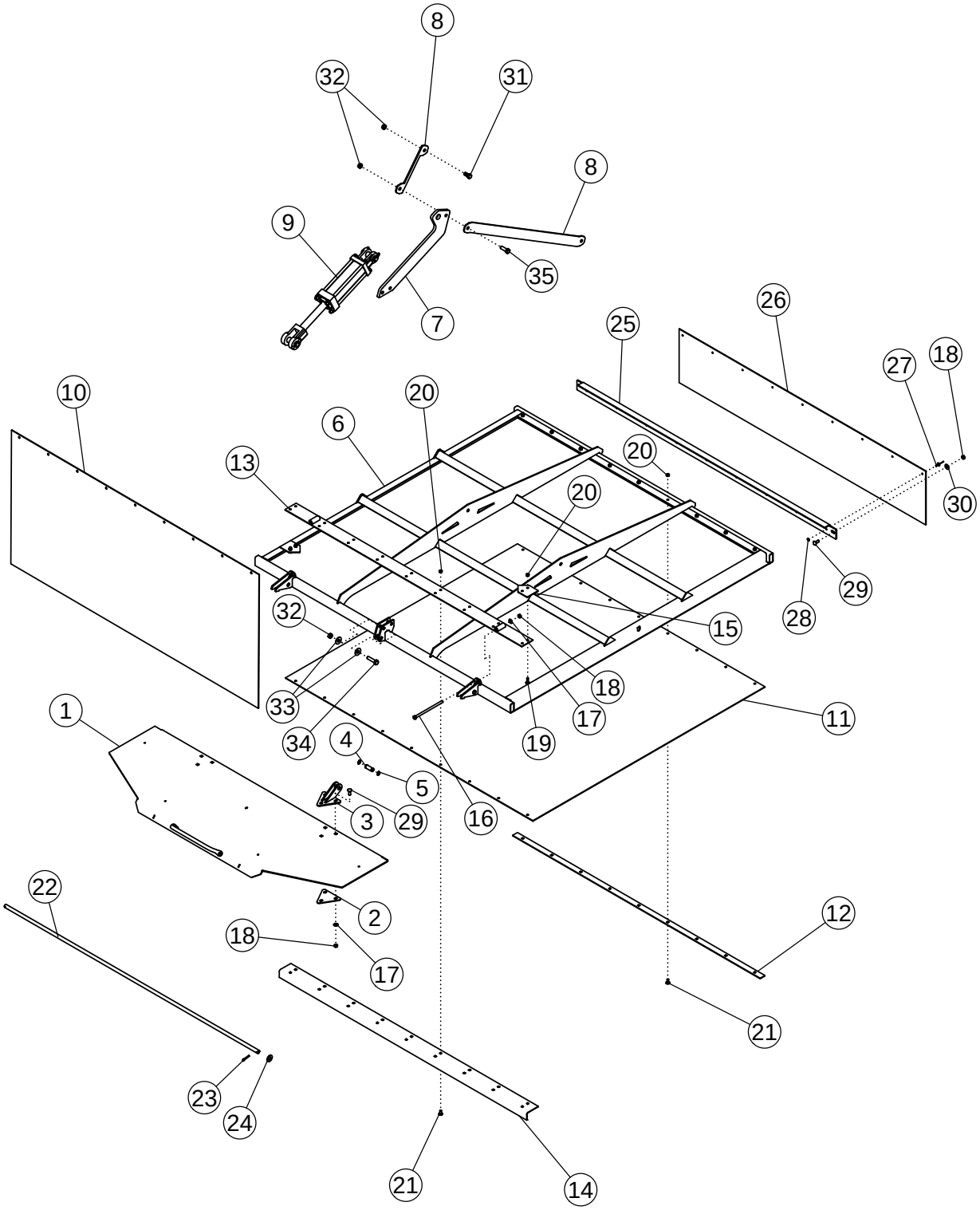
8
32
31
8
9
35
7
26
25
27
18
10
20
6
20
13
20
30
29
28
32
15
18
33
17
11
1
34
19
4
5
3
29
16
22
2
12
18
17
21
23
24
21
14

TOP DOOR ASSY

ITEM	PART NO.	DESCRIPTION	QTY
1	306180	WLDMT-SHROUD DOOR 6R	2
2	306090	PLATE-SPACER OUTER	4
3	305655	WLDMT-HINGE SHROUD DOOR	4
4	305244	PIN-TOP DOOR ZP	10
5	305261	SNAP-RING .625 HD EXTERNAL ZP	20
6	306272	WLDMT-TOP DOOR 6R	2
7	306282	PLATE-DOOR CYLINDER LIFT 6R	2
8	306283	PLATE-LIFT STRAP 6R	4
9	73077	CYLINDER HYDRAULIC 3 X 8	2
10	306264	LINER-HANGING 6R	2
11	306265	LINER-TOP DOOR 6R	2
12	306266	PLATE-LINER RETAINER	2
13	306270	WLDMT-TENSION	2
14	306267	PLATE-TENSION LOWER	2
15	306268	PLATE-TENSION UPPER	4
16	34926	BOLT-HEX: .38 X 7.00 NC GR5 ZP	4
17	1014608	WASHER-FLT: SAE .38 ZP	4
18	1016999	NUT-TOPLOCK: .38 NC GR5 ZP	4
19	1017255	BOLT-CRG: .31 X 1.00	20
20	1030700	NUT-TOPLOCK: .31 NC GR5 ZP	54
21	65702	BOLT-CRG: .31 X .75 NC GR5 ZP	46
22	306194	BAR-LINER SUPPORT 6R	2
23	1012375	PIN-COTTER .19 X 1.50 NP	4
24	1013004	WASHER-FLAT: SAE .63 ZP	4
25	306186	PLATE-REAR SUPPORT 6R	2
26	306185	LINER-REAR 6R	2
27	1011974	RIVET-POP: .19 X .531 ZP	18
28	306105	WASHER-RIVET BLIND .19"	18
29	59488	BOLT-CRG: .38 X 1.00 NC GR5 ZP	16
30	1011828	WASHER-FLAT .38 ZP	4
31	1011096	BOLT-HEX: .50 X 1.00 NC GR5 ZP	4
32	1027461	NUT-TOPLOCK: .50 NC GR5 ZP	10
33	1014443	WASHER-FLAT: .50 ZP	8
34	1011609	BOLT-HEX: .50 X 2.00 NC GR5 ZP	4
35	1011607	BOLT-HEX: .50 X 1.50 NC GR5 ZP	4

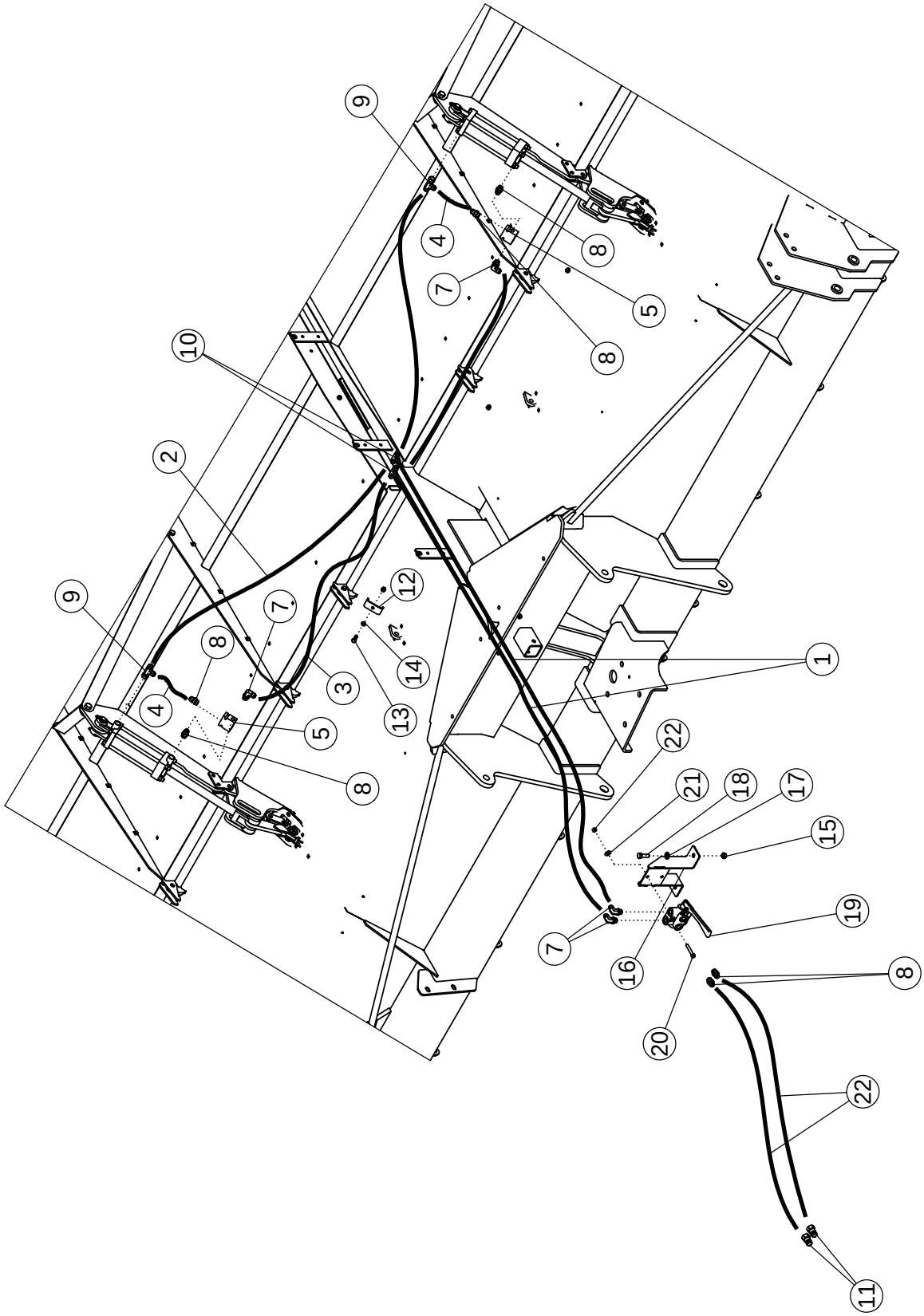
9
4
7
8
5
8
10
2
9
7
8
4
5
8
3
12
14
13
1
22
21
18
17
15
19
7
16
20
8
22
11

TOP DOOR HYDRAULICS

ITEM	PART NO.	DESCRIPTION	QTY
1	72475	HOSE: .38 X 30 8MB-8FJX	2
2	305636	HOSE: .38 X 82 8FJX-8FJX	2
3	305637	HOSE: .38 X 72 8FJX-8FJX	2
4	305345	HOSE: .38 X 8.25 8FJX-8FJX	2
5	305404	VALVE-CHECK SINGLE PILOT OPERATED	2
6	305343	FTG-ADAPTER: 8MB-8MB	2
7	58560	FTG-ELBOW: 8MB-8MJ-90	2
8	56226	FTG-ADAPTER: 8MB-8MJ	4
9	63015	FTG-TEE: 8MJ-8FJX-8MJ	2
10	57667	FTG-TEE: 8MJ-8MJ-8MJ	2
11	36290	PIONEER TIP 8010-15P (#8 ORB)	2
12	50714	CLAMP 1/2" ZP	4
13	1011601	BOLT-HEX: .38 X 1.25 NC GR5 ZP	4
14	1011586	WASHER-LOCK: .38 ZP	4
15	1027461	NUT-TOPLOCK: .50 NC GR5 ZP	2
16	305794	WLDMT-SELECTOR MOUNT	1
17	1011584	WASHER-FLAT: SAE .50 ZP	1
18	1011607	BOLT-HEX: .50 X 1.50 NC GR5 ZP	2
19	58470	VALVE-SELECTOR PAINTED	1
20	59390	BOLT-HEX: .38 X 2.25 NC GR5 ZP	2
21	1011828	WASHER-FLAT .38 ZP	2
22	300053	HOSE: .50 X 108 8MB-8FJX	2

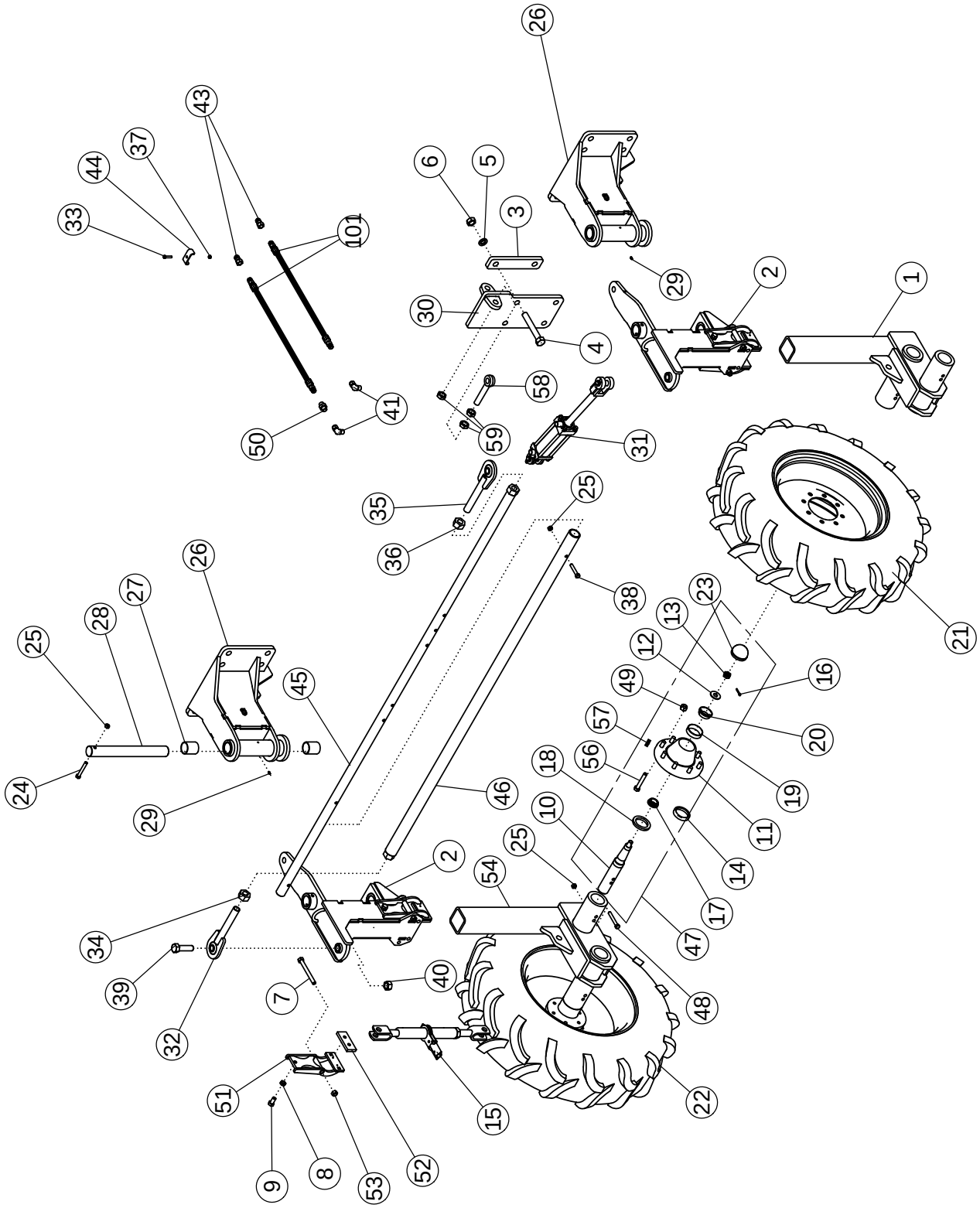
26
43
37
44
33
101
6
5
3
29
2
1
30
4
58
41
50
59
31
35
25
36
38
26
27
28
25
45
23
13
12
16
49
20
57
56
18
19
24
29
46
10
11
25
14
2
54
17
34
47
39
40
48
7
32
51
22
15
9
8
53
52
21

OFFEST STEERABLE REAR STRUTS - 11.2 X 24

ITEM	PART NO.	DESCRIPTION	QTY
1	305279	WLDMT-SPINDLE HOUSING OFFSET RH	1
2	68237	WLDMT-STEERABLE STRUT UPPER	2
3	58408	BAR - BOLTING	10
4	1018839	BOLT-HEX: 1.00 X 7.00 NC GR8 ZP	20
5	1013539	WASHER-LOCK: 1.00 ZP	20
6	1012664	NUT-HEX: 1.00 NC GR2 ZP	20
7	1013068	BOLT-HEX .63 X 6.00 NC GR5 ZP	2
8	66336	NUT-JAM: .63 NF GR2 ZP	2
9	1030703	BOLT-HEX: .63 X 1.25 NF GR5 ZP	2
10	52954*	SPINDLE	4
11	53623*	HUB-WHEEL 8 BOLT	4
12	1030728*	WASHER-FLAT: SAE 1.00 ZP	4
13	1030726*	NUT-SPINDLE: 1.00 NF NP	4
14	53622*	BEARING CUP INNER	2
15	52407	RATCHET JACK-PAINTED	2
16	1030797*	PIN-COTTER: .19 X 1.75 NP	4
17	53621*	BEARING CONE INNER	4
18	53619*	SEAL	4
19	52243*	BEARING CUP OUTER	4
20	53620*	BEARING CONE OUTER	4
21	56986	TIRE-MNTD: 11.2-24 10 PLY R1 RH	2
	56903	WHEEL W10 X 24 8 BOLT (1.875 POS)	1
	56976	TIRE 11.2-24 10 PLY R1	1
22	63992	TIRE-MNTD: 11.2-24 10 PLY R1 LH	2
	56903	WHEEL W10 X 24 8 BOLT (1.875 POS)	1
	56976	TIRE 11.2-24 10 PLY R1	1
	68973	TUBE-REPAIR 11.2-24 (NOT SHOWN)	AR
23	53624*	CAP-HUB	4
24	1011612	BOLT-HEX: .50 X 3.50 GR5 ZP	2
25	1027461	NUT-TOPLOCK: .50 NC GR5 ZP	7
26	305925	WLDMT-PIVOT MOUNT DLS	2
27	59204	BUSHING - BORED	4
28	58274	SHAFT	2
29	1011748	ZERK - GREASE	4
30	301064	WLDMT-CYLINDER BRACKET ADJ	1
31	62319	CYLINDER HYDRAULIC 2 X 4	1
	69654	SEAL KIT FOR 62319	
32	58203	WLDMT-TIE ROD END LH	1
33	1014124	BOLT-HEX: .31 X 1.50 NC GR5 ZP	2
34	1030729	NUT-HEX: 1.25 NC GR2 LH ZP	1
35	58186	WLDMT-TIE ROD END RH	1

CONTINUED

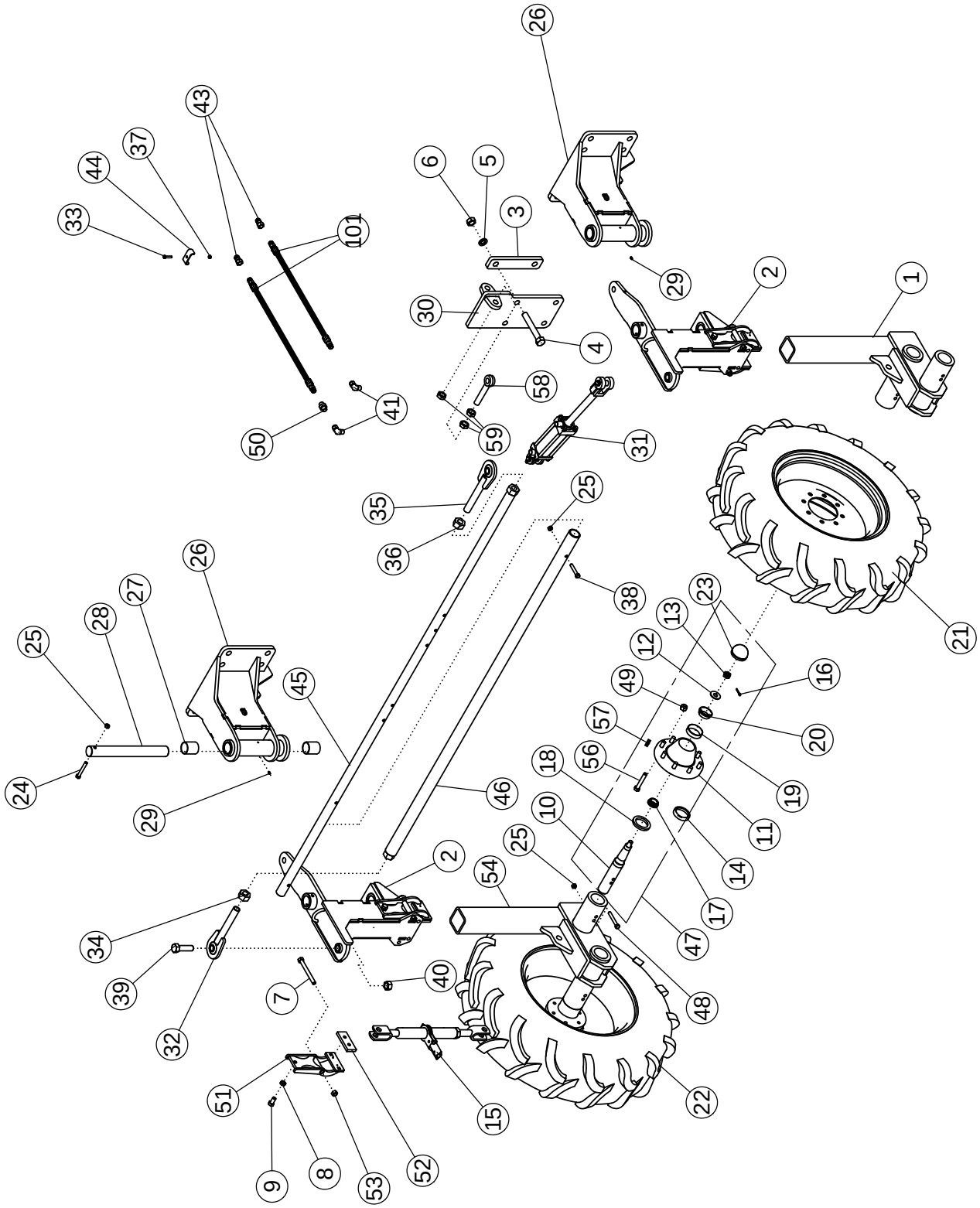
26
43
37
44
33
101
6
5
3
29
2
1
30
4
58
41
50
59
31
35
25
36
38
26
27
28
25
45
23
13
12
16
49
20
57
56
18
19
24
29
46
10
11
25
2
54
14
17
34
47
39
40
48
7
32
51
22
15
9
8
53
52
21

OFFSET STEERABLE REAR STRUTS - 11.2 X 24
(CONTINUED)

ITEM	PART NO.	DESCRIPTION	QTY
36	1011621	NUT-HEX: 1.25 NC GR2 ZP	1
37	1030700	NUT-TOPLOCK: .31 NC GR5 ZP	2
38	1016858	BOLT-HEX: .50 X 2.75 NC GR5 ZP	1
39	1011626	BOLT-HEX: 1.00 X 3.50 NC GR5 ZP	2
40	1016969	NUT-TOPLOCK: 1.00 NC GR5 ZP	2
41	1026247	FTG-ELBOW: 6MP-8MJ 90	2
42	300032	HOSE: .50 X 276 8MB-8FJX	2
43	36290	PIONEER TIP 8010-15P (#8 ORB)	2
44	50714	CLAMP 1/2" ZP	2
45	58488	WLDMT-TIE ROD MALE 85"	1
46	58486	WLDMT-TIE ROD FEMALE 85"	1
47	53167	ASSY-HUB & SPINDLE	4
48	1011618	BOLT-HEX: .50 X 5.00 NCGR5 ZP	4
49	53625*	NUT-WHEEL: .63-18NF	32
50	300030	FTG-RESTRICTOR 8MJ-8FJX .062	1
51	69956	WLDMT- DEF STRUT CLAMP	2
52	69971	PLASTIC-STRUT CLAMP	2
53	1016595	NUT-TOPLOCK: .63 NC GR5 ZP	2
54	305280	WLDMT-SPINDLE HOUSING -8" OFFSET LH	1
55	69987	SCREW-MACH: FH-TORX 1/4-20 X 1.00	4
56	54393	STUD-HUB BOLT	8
57	301490*	SELF TAPPING GREASE FITTING	1
58	62081	BOLT-EYEBOLT: 1.00 X 6.00 GR8 ZP	1
59	1026880	NUT-JAM: 1.00 NC GR2 ZP	3

* Items are included in Item 47

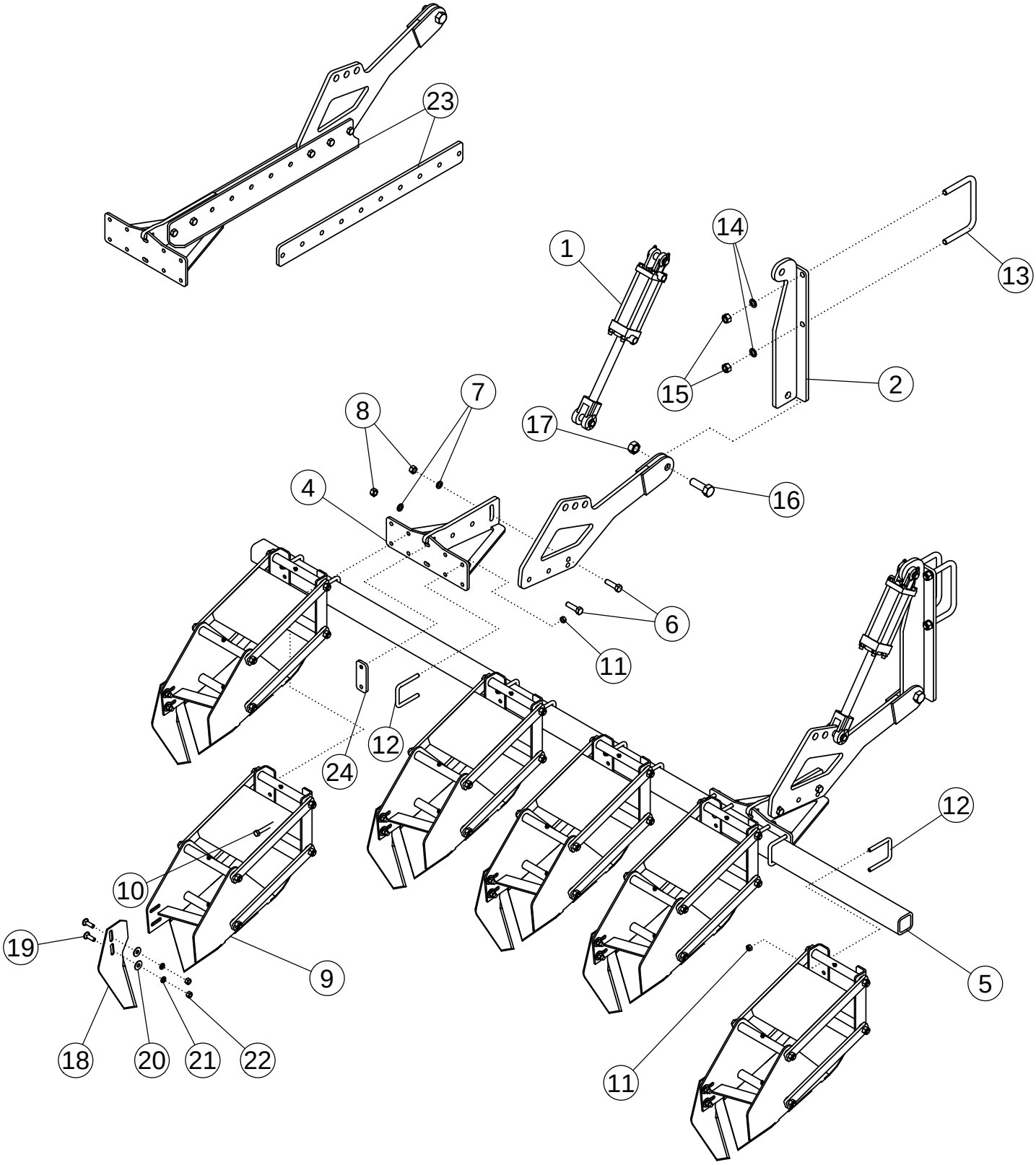
23
1
14
13
15
2
8
7
17
4
16
6
11
12
24
12
10
19
9
5
18
20
21
22
11

SCALPER BAR ASSEMBLY

ITEM	PART NO.	DESCRIPTION	QTY
1	58890	CYLINDER HYDRAULIC 3 X 8	2
	301314	SEAL KIT FOR 58890 UNIVERSAL	
2	68239	WLDMT - MOUNT	2
3	69126	WLDMT-SCALPER ARM MNT	2
4	69127	WLDMT-BAR MNT BRACKET	2
5	51865	SCALPER BAR	1
6	1017526	BOLT-HEX .63 X 2.25 NC GR5 ZP	4
7	1011813	WASHER-LOCK: .63 ZP	4
8	1011578	NUT-HEX: .63 NC GR2 ZP	4
9	63462	ASSY-SCALPER BASKET	6
10	1013682	BOLT-HEX: .50 x 4.50 NC GR5 ZP	8
11	1027461	NUT-TOPLOCK: .50 NC GR5 ZP	36
12	69954	U-BOLT: .50 X 4.50 X 3 X 4.50	14
13	56263	U-BOLT: .75 X 5.5 X 8 X 5.5	4
14	1012061	WASHER-LOCK: .75 ZP	8
15	1011620	NUT-HEX: .75 NC GR2 ZP	8
16	1018007	BOLT-HEX: 1.0 X 3.00 NC GR5 ZP	2
17	1016969	NUT-TOPLOCK: 1.00 NC GR5 ZP	2
18	51782	SCALPER KNIFE-HEAT TREAT	6
19	1011660	BOLT-CRG: .50 X 1.50 NC GR5 ZP	12
20	1014443	WASHER-FLAT: .50 ZP	12
21	1011581	WASHER-LOCK: .50 ZP	12
22	1011577	NUT-HEX: .50 NC ZP	12
23	305183*	PLATE-SCALPER EXTENSION	4
	306101	PLATE-SCALPER EXT FLAT	
24	51551	BAR-BASKET MOUNTING	2

*USED WITH LARGER TIRE OPTION

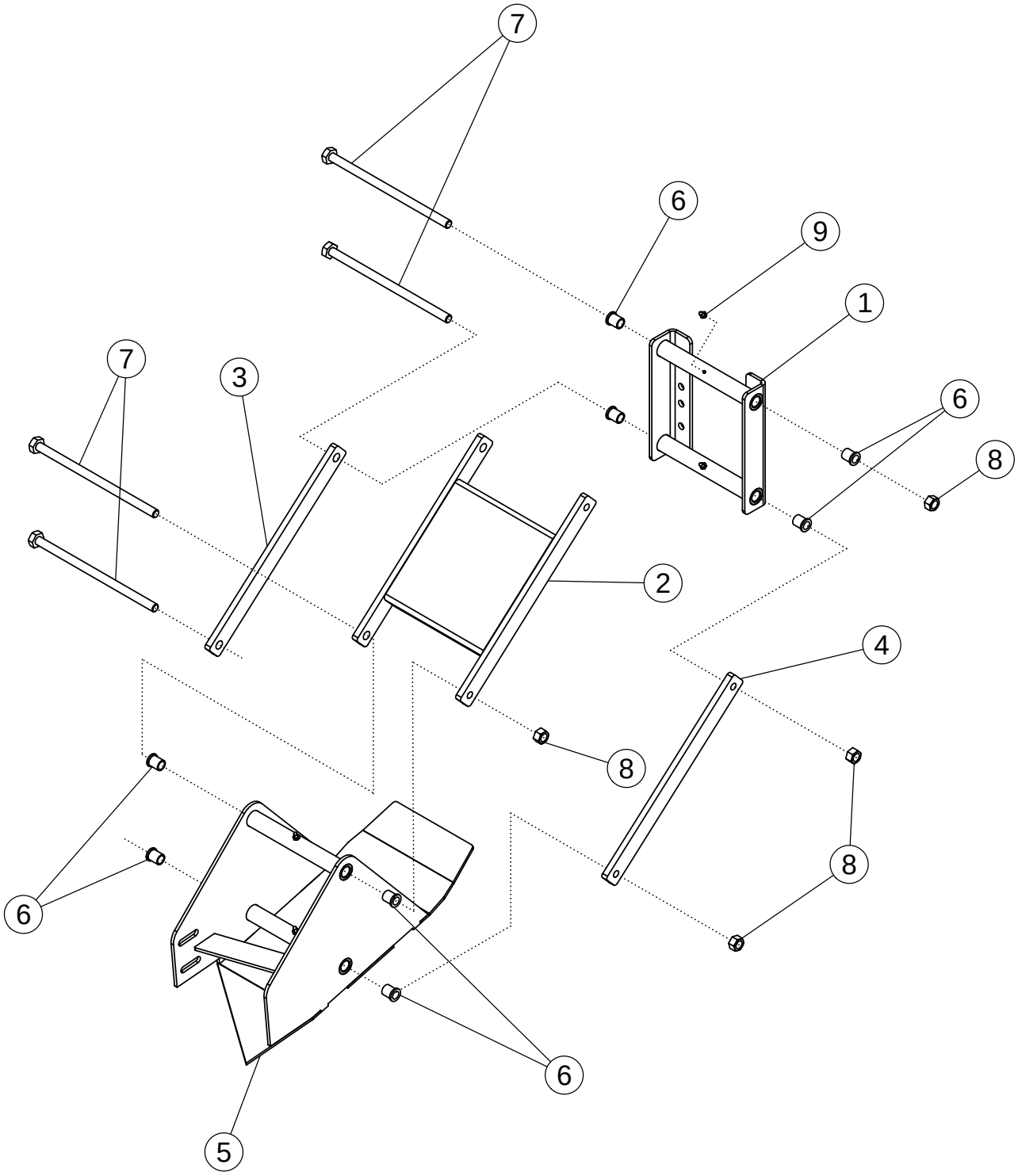
7
6
9
1
7
3
6
8
2
4
8
8
6
6
5

SCALPER BASKET

ITEM	PART NO.	DESCRIPTION	QTY
1	63551	WLDMT-BASKET MOUNT	1
2	63556	WLDMT-UPPER LINK	1
3	63555	BAR-PARALLEL LINK	1
4	63463	BAR-LINK THREADED	1
5	63550	WLDMT-BASKET FRAME	1
6	306080	BUSHING-FLANGE: .628 X 8.16 X 1.4375L	8
7	305854	WLDMT-THREADED ROD SCALPER ZP	4
8	59316	NUT-CENTERLOCK: .625 NC GR5 ZP	4
9	1011748	ZERK-GREASE .25 UNF STRAIGHT	4

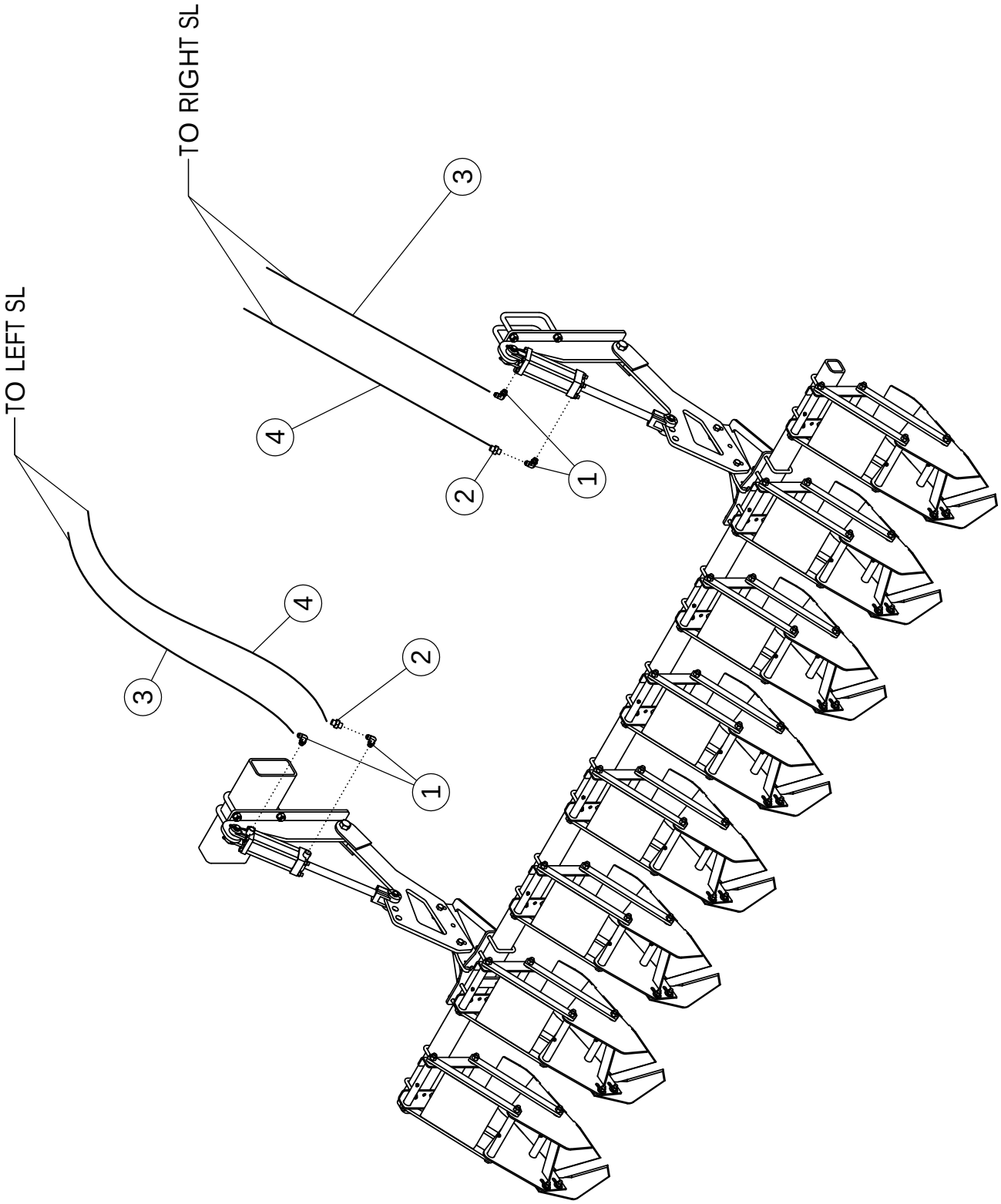
TO LEFT SL
TO RIGHT SL
3
4
2
1
3
4
2
1

SCALPER BAR MOUNTED ROW FINDER
SCALPER HYDRAULICS

ITEM	PART NO.	DESCRIPTION	QTY
1	58560	FTG-ELBOW: 8MB-8MJ-90	4
2	1019844	FTG-RESTRICTOR 8FJ-8MJ	2
3	63005	HOSE: .38 X 048 8FJX-8FJX	2
4	305961	HOSE: .38 X 058 8FJX-8FJX	2

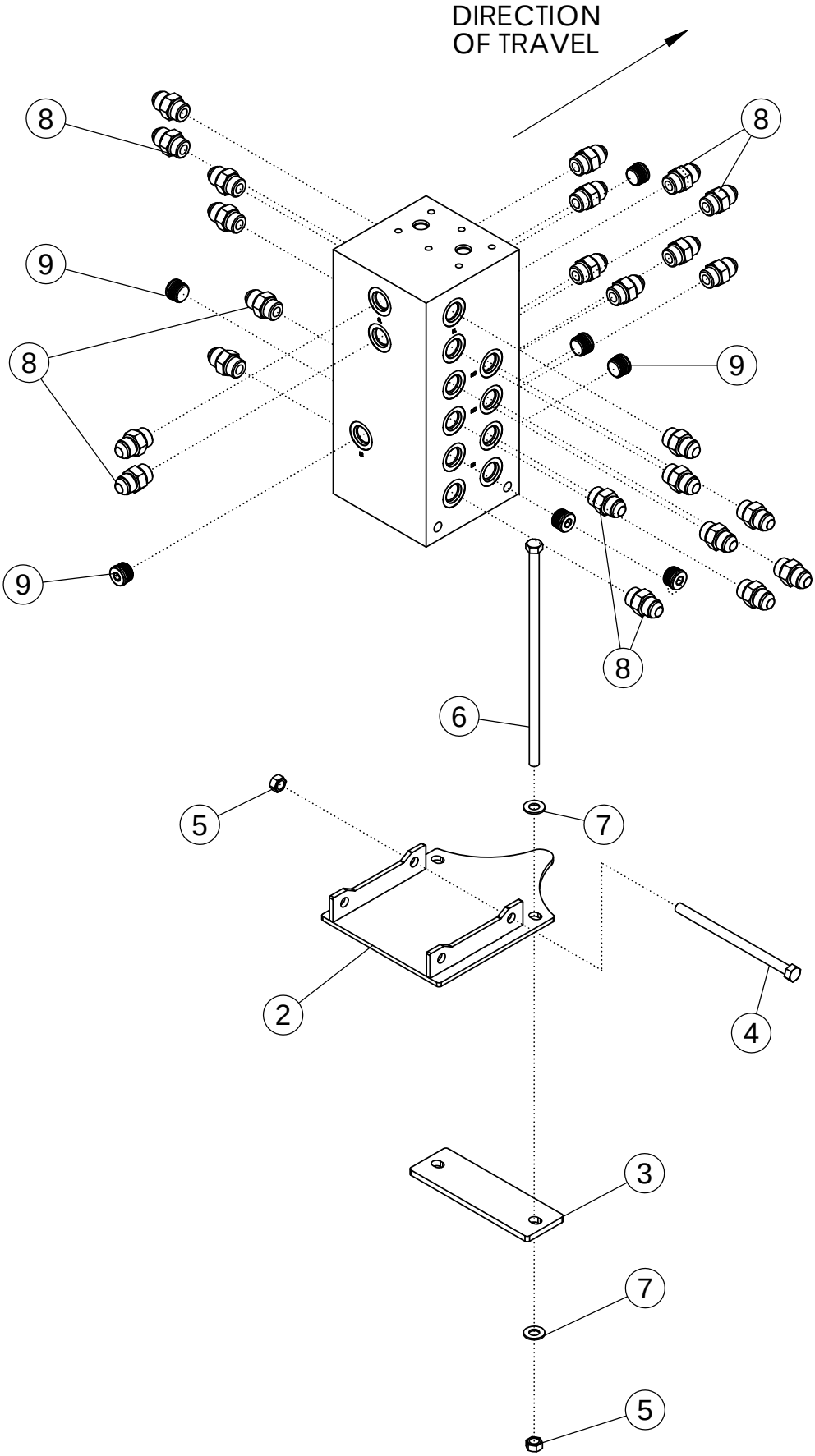
DIRECTION
OF TRAVEL
8
8
9
8
9
9
8
6
5
7
2
4
3
7
5

VALVE BLOCK AND MOUNT

ITEM	PART NO.	DESCRIPTION	QTY
1	305960	HYDRAULIC BLOCK DLS	1
2	305659	WLDMT-VALVE BLOCK MOUNT	1
3	305662	PLATE-VALVE BLOCK BOLTING	1
4	34925	BOLT-HEX: .38 X 6.00 NC GR5 ZP	2
5	1016999	NUT-TOPLOCK: .38 NC GR5 ZP	4
6	305663	BOLT-HEX: .38 X 10.00 NC GR5 ZP	2
7	1014608	WASHER-FLT: SAE .38 ZP	4
8	58560	FTG-ELBOW: 8MB-8MJ-90	1
9	56226	FTG-ADAPTER: 8MB-8MJ	24
10	305666	FTG-PLUG: 8MB ALLEN DRIVE	AR

**** BLOCK SHOWN WITH ALL OPTIONS, IF NOT EQUIPPED BLOCK PORTS ARE PLUGGED WITH ITEM 10.**

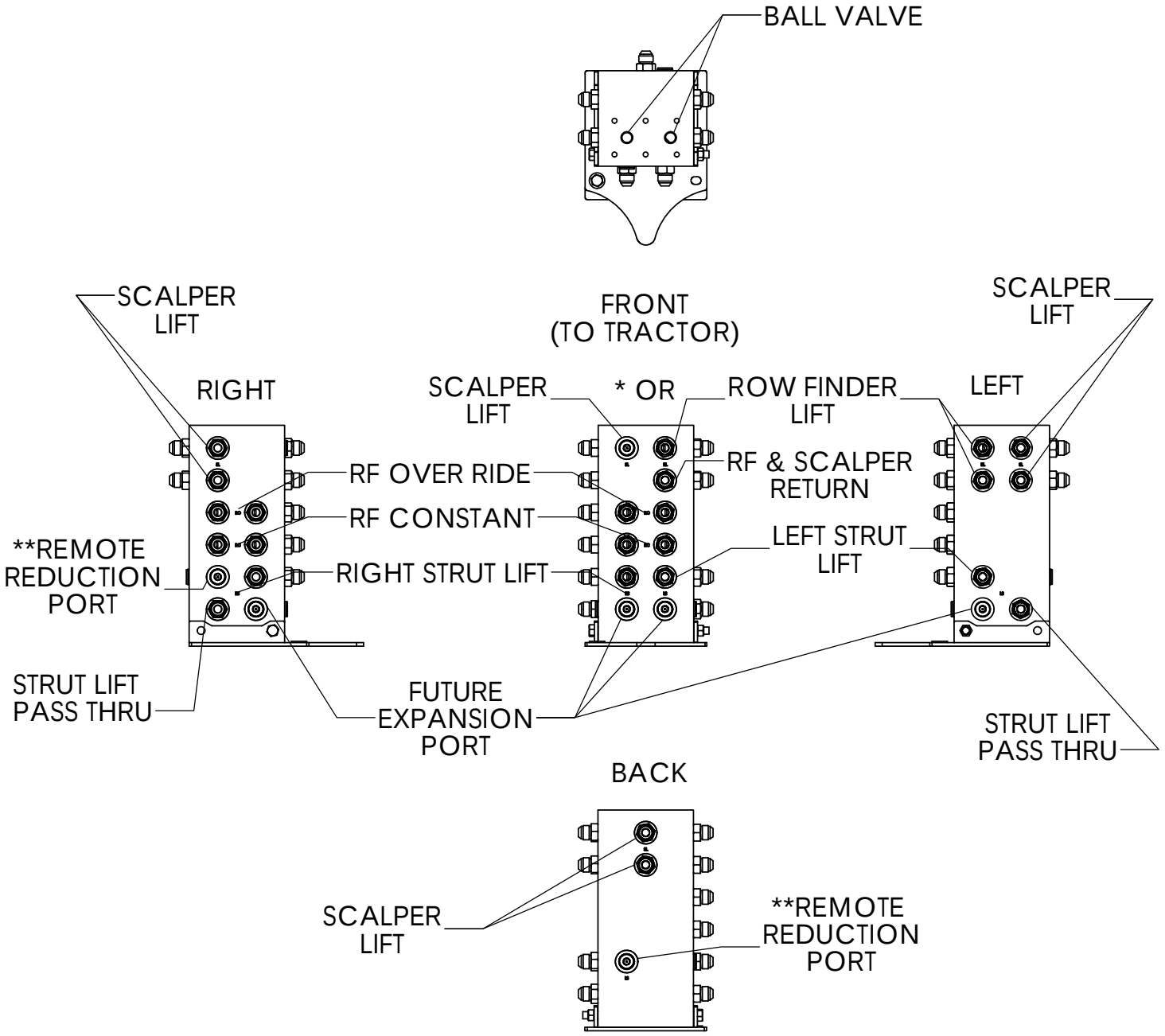

* EITHER THE SCALPER LIFT OR ROW FINDER LIFT PORT IS USED AND THE OTHER IS PLUGGED.
- IF A FRAME MOUNTED ROW FINDER IS USED, WITH OR WITHOUT SCALPER, THE ROW FINDER LIFT PORT IS USED IN CONJUNCTION WITH A BALL VALVE. ENABELING USE OF BOTH THE SCALPER (IF EQUIPPED) AND ROW FINDER OR ROW FINDER.
- IF A SCALPER WITHOUT FRAME MOUNTED ROW FINDER IS EQUIPPED THE SCALPER LIFT PORT IS USED AND NO BALL VALVE IS INSTALLED.

** REMOTE REDUCTION PORT ALLOWS THE ROW FINDER CONSTANT FUNCTION TO BE TIED INTO THE STRUT LIFT FUNCTION TO ELIMINATE THE NEED FOR ONE ADDITIONAL HYDRAULIC REMOTE ON THE TRACTOR. IN THIS CONFIGURATION RETRACTING OR LOWERING THE STRUTS ALSO POWERS THE ROWFINDER CONSTANT FUNCTION. WHEN EXTENDING THE STRUTS A CHECK VALVE INSTALLED ON THE ROW FINDER PROHIBITS BACKWARDS OIL FLOW.

** AN ALTERNATE OPTION TO REDUCE HYDRAULIC REMOTES REQUIRED WOULD BE TO HOOK UP THE ROW FINDER CONSTANT TO THE TRACTOR'S POWER BEYOND USING AN EXTERNAL FLOW CONTROL SET TO APPROXIMATELY 7 GPM.

THIS PAGE
INTENTIONALLY
LEFT BLANK

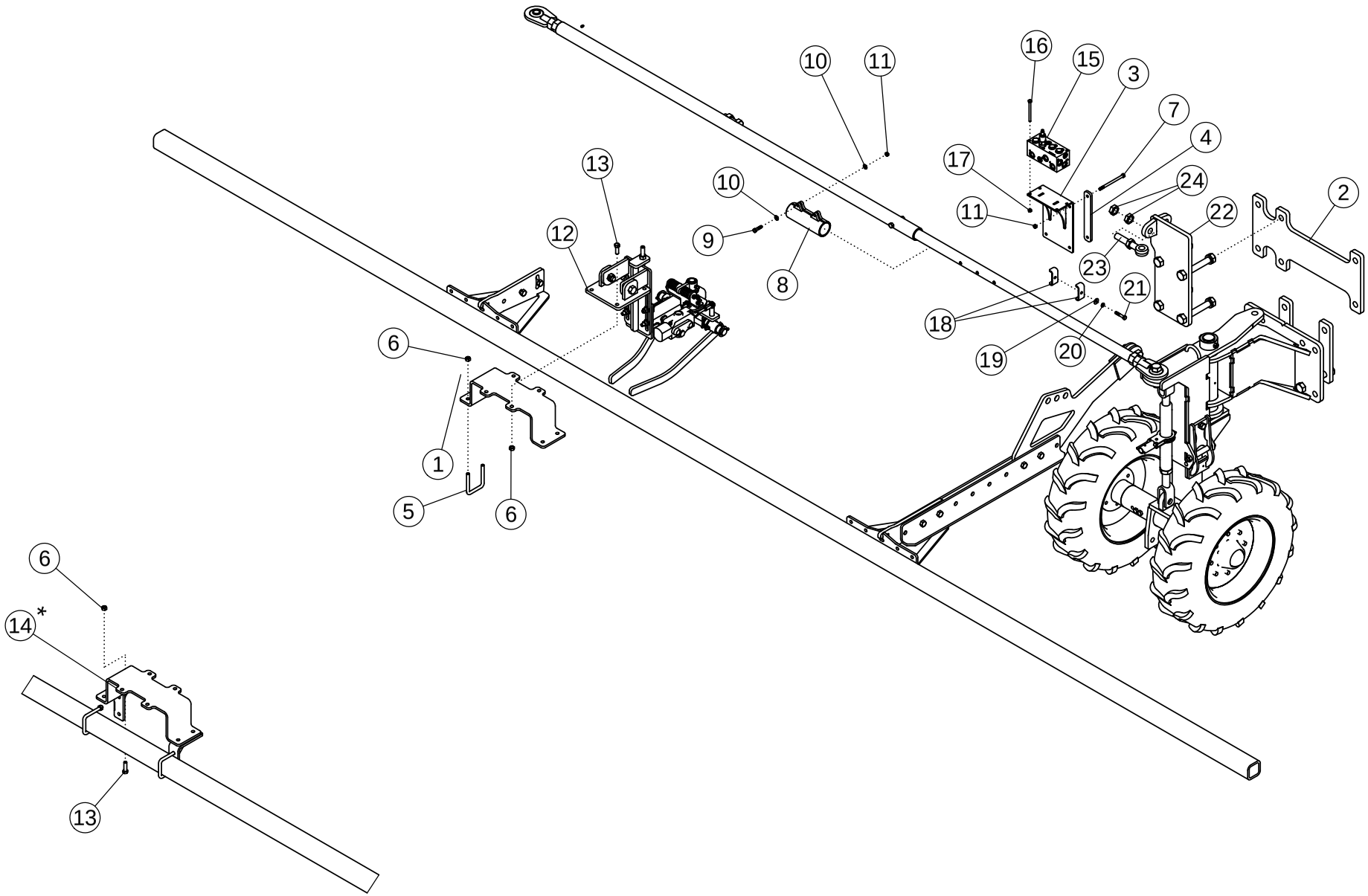

NON-AMITY SCALPER MOUNTING

ROW FINDER - SCALPER MOUNT 6R/8R

ITEM	PART NO.	DESCRIPTION	QTY
1	70021	WLDMT-DEF ROW FINDER MOUNT	1
2	305775	PLATE-DEF CYL MNT STRAP (28.5" STROKE)	1
3	69996	WLDMT-DEF VALVE MNT	1
4	64288	PLATE-BRACKET BACKING	2
5	69954	U-BOLT: .50 X 4.50 X 3 X 4.50	2
6	1027461	NUT-TOPLOCK: .50 NC GR5 ZP	8 OR 12*
7	64289	BOLT-HEX: .38 X 5.50 NC GR5 ZP	4
8	69557	WLDMT-TIE ROD CLAMP	1
9	1011602	BOLT-HEX: .38 X 1.50 NC GR5 ZP	2
10	1014608	WASHER-FLT: SAE .38 ZP	4
11	1016999	NUT-TOPLOCK: .38 NC GR5 ZP	6
12	**NOTE**	HYDRAULIC ROW FINDER	1
13	1011608	BOLT-HEX: .50 X 1.75 NC GR 5 ZP	4 OR 8*
14	69454*	WLDMT-RF MOUNT EXTENSION	2
15	69999	VALVE-DEF RF RETURN	1
16	1030778	BOLT-HEX: .31 X 4.00 NC GR5 ZP	2
17	1030700	NUT-TOPLOCK: .31 NC GR5 ZP	2
18	50714	CLAMP .50" ZP	10
19	1014608	WASHER-FLAT: SAE .38 XP	5
20	1011586	WASHER-LOCK: .38 ZP	5
21	1013239	BOLT-HEX: .38 X 3.00 NC GR5 ZP	4
22	301064	WLDMT-CYLINDER BRACKET ADJ	1
23	62081	BOLT-EYEBOLT 1" X 6" GR 8	1
24	1026880	NUT-HEX JAM: 1.00 NC GR2 ZP	3

* ITEM 14 AND HARDWARE USED ONLY WITH NON AMITY SCALPER BASKETS

NOTE

- ROWFINDER NEEDS TO BE OPEN CENTER (PLUG REMOVED)
- PLACE ROWFINDER ON THE FIRST ROW LEFT OF CENTER
- FOR PARTS, REFERENCE ROWFINDER MANUAL PAGE (M4770)

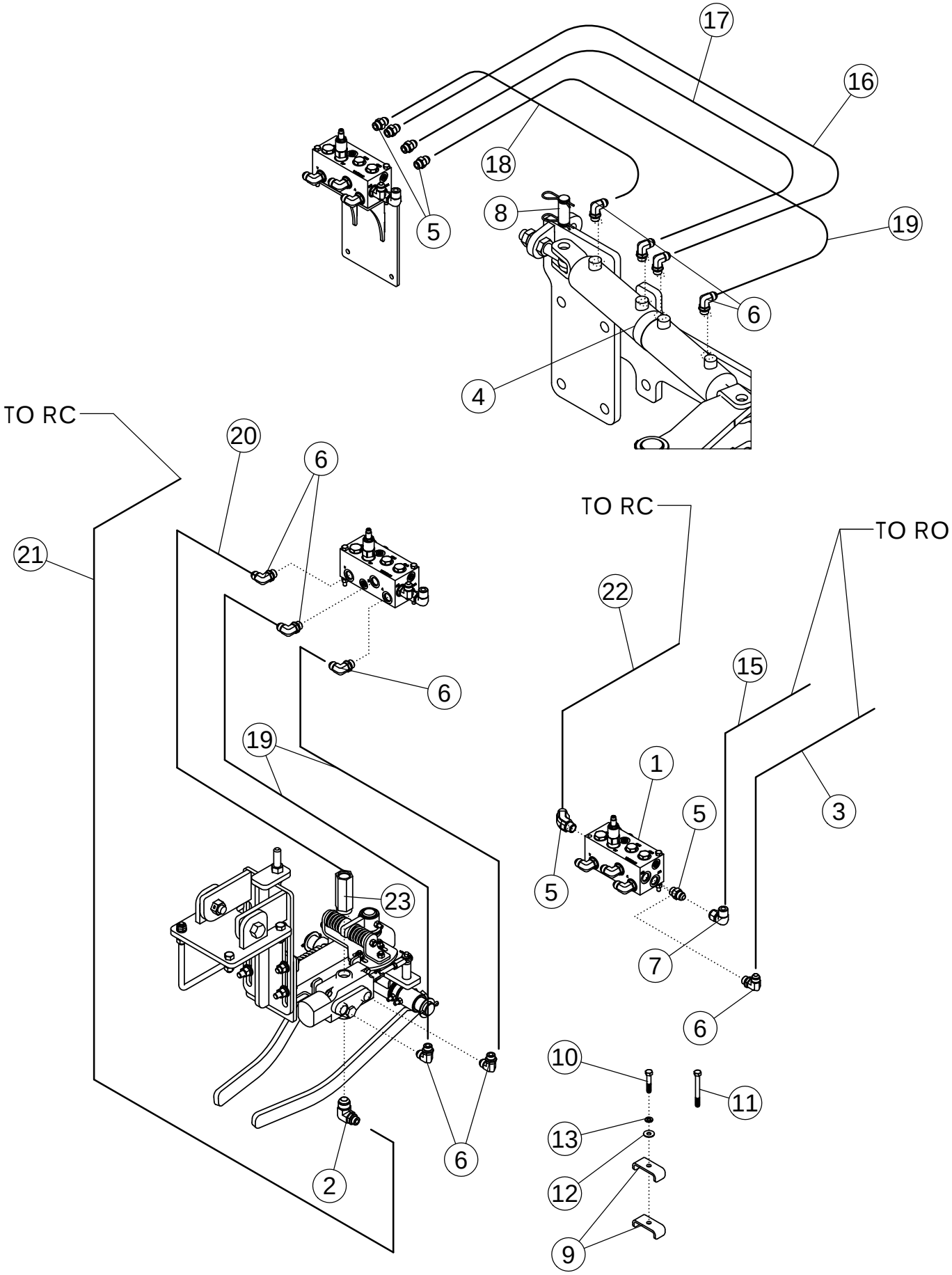
17
16
18
8
5
19
6
4
TO RC
20
6
21
TO RC
TO RO
22
15
6
19
1
3
5
5
23
7
6
10
11
13
6
12
2
9

SCALPER MOUNTED ROW FINDER HYDRAULICS

ITEM	PART NO.	DESCRIPTION	QTY
1	69999	VALVE-DEF ROWFINDER RETURN	1
2	65901	FTG-ELBOW: 10MB-8MJ-90	2
3	305677	HOSE: .50 X 027 8FJX-8FJX90	1
4	69200	CYLINDER-HYD 3 X 4 4PORT 23.5 CLOSED	1
5	56226	FTG-ADAPTER: 8MB-8MJ	6
6	58560	FTG-ELBOW: 8MB-8MJ 90	10
7	1015801	FTG-ELBOW: 8MJ-8FJX 90	1
8	69167	PIN-CLYNDER W/CLIPS 1.00 X 2.25	2
9	50714	CLAMP .50" ZP	10
10	1011603	BOLT-HEX: .38 X 1.75 NC GR5 ZP	1
11	1013239	BOLT-HEX: .38 X 3.00 NC GR5 ZP	4
12	1014608	WASHER-FLAT: SAE .38 ZP	5
13	1011586	WASHER-LOCK: .38 ZP	5
14	305677	HOSE: .50 X 027 8FJX-8FJX90L	1
15	69564	HOSE: .50 X 108 8FJX-8FJX90	1
16	69565	HOSE: .50 X 108 8FJX-8FJX90L	1
17	69566	HOSE: .50 X 114 8FJX-8FJX90L	1
18	69567	HOSE: .50 X 102 8FJX-8FJX90	3
19	305681	HOSE: .50 X 090 8FJX-8FJX	
20	69569	HOSE: .50 X 336 8MB-8FJX90	1
21	69570	HOSE: .50 X 252 8FJX-8MB	1
22	305675	HOSE: .50 X 017 8FJX-8FJX	1
23	305665	VALVE-CHECK 10MB-10MJ	1

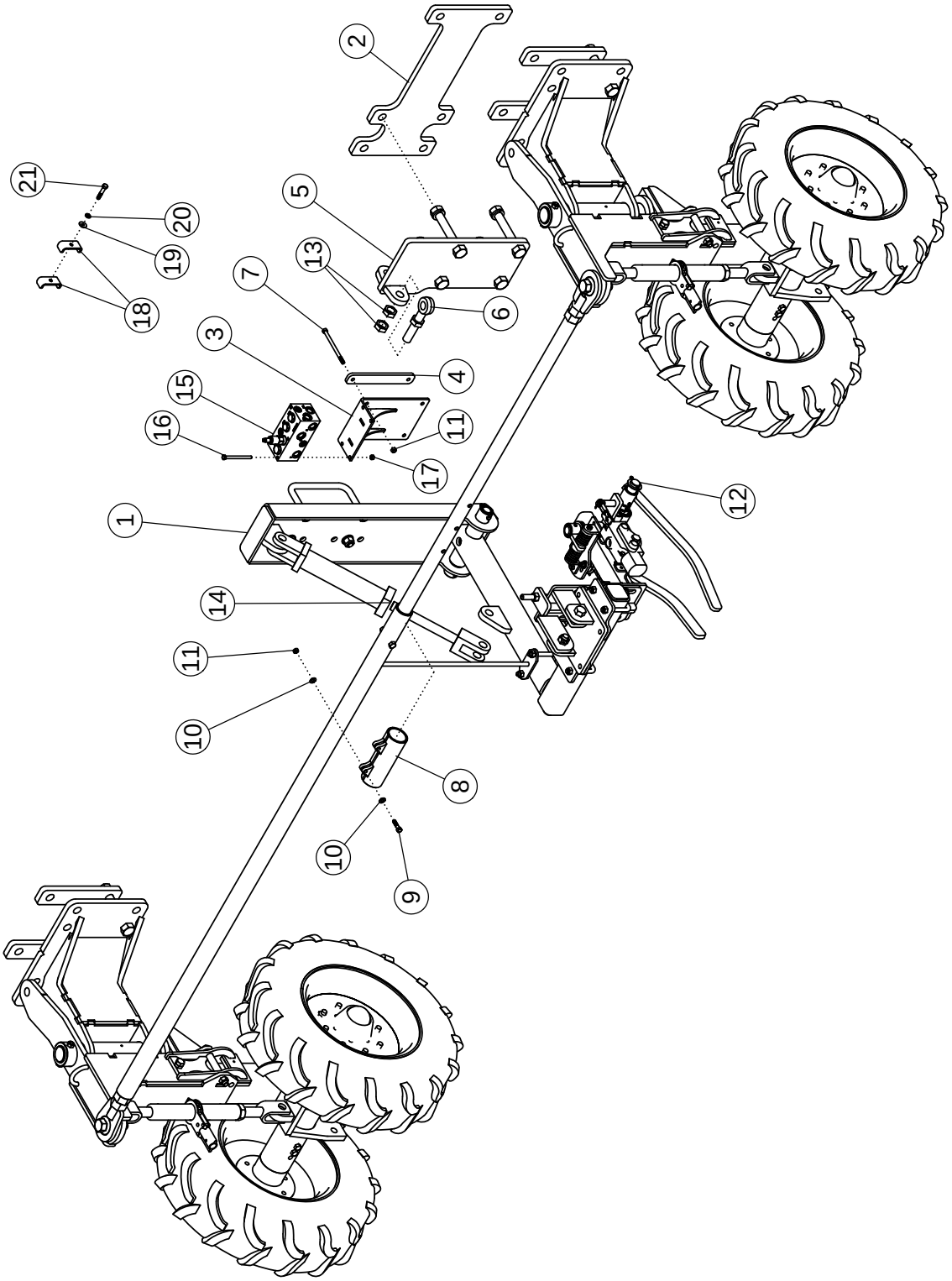
21
20
19
18
2
5
13
7
6
3
4
15
16
11
17
1
12
14
11
10
8
10
9

ROW FINDER - FRAME MOUNTED

ITEM	PART NO.	DESCRIPTION	QTY
1	305055	ASSY-DEF ROW FINDER MOUNT	1
2	305775	PLATE-DEF CYL MNT STRAP (28.5" STROKE)	1
3	69996	WLDMT-DEF VALVE MNT	1
4	64288	PLATE-BRACKET BACKING	2
5	301064	WLDMT-CYLINDER BRACKET ADJ	1
6	62081	BOLT-EYEBOLT: 1.00 X 6.00 GR8 ZP	1
7	64289	BOLT-HEX: .38 X 5.50 NC GR5 ZP	4
8	69557	WLDMT-TIE ROD CLAMP	1
9	1011602	BOLT-HEX: .38 X 1.50 NC GR5 ZP	2
10	1014608	WASHER-FLT: SAE .38 ZP	4
11	1016999	NUT-TOPLOCK: .38 NC GR5 ZP	6
12	**NOTE**	HYDRAULIC ROW FINDER	1
13	1026880	NUT-JAM: 1.00 NC GR2 ZP	3
14	33612	CYL-HYD: 20TH08-112ASAE	1
15	69999	VALVE-DEF RF RETURN	1
16	1030778	BOLT-HEX: .31 X 4.00 NC GR5 ZP	2
17	1030700	NUT-TOPLOCK: .31 NC GR5 ZP	2
18	50714	CLAMP .50" ZP	10
19	1014608	WASHER-FLAT: SAE .38 XP	5
20	1011586	WASHER-LOCK: .38 ZP	5
21	1013239	BOLT-HEX: .38 X 3.00 NC GR5 ZP	4

NOTE

- ROWFINDER NEEDS TO BE OPEN CENTER (PLUG REMOVED)
- PLACE ROWFINDER ON THE FIRST ROW RIGHT OF CENTER
- FOR PARTS, REFERENCE ROWFINDER MANUAL PAGE (M4770)

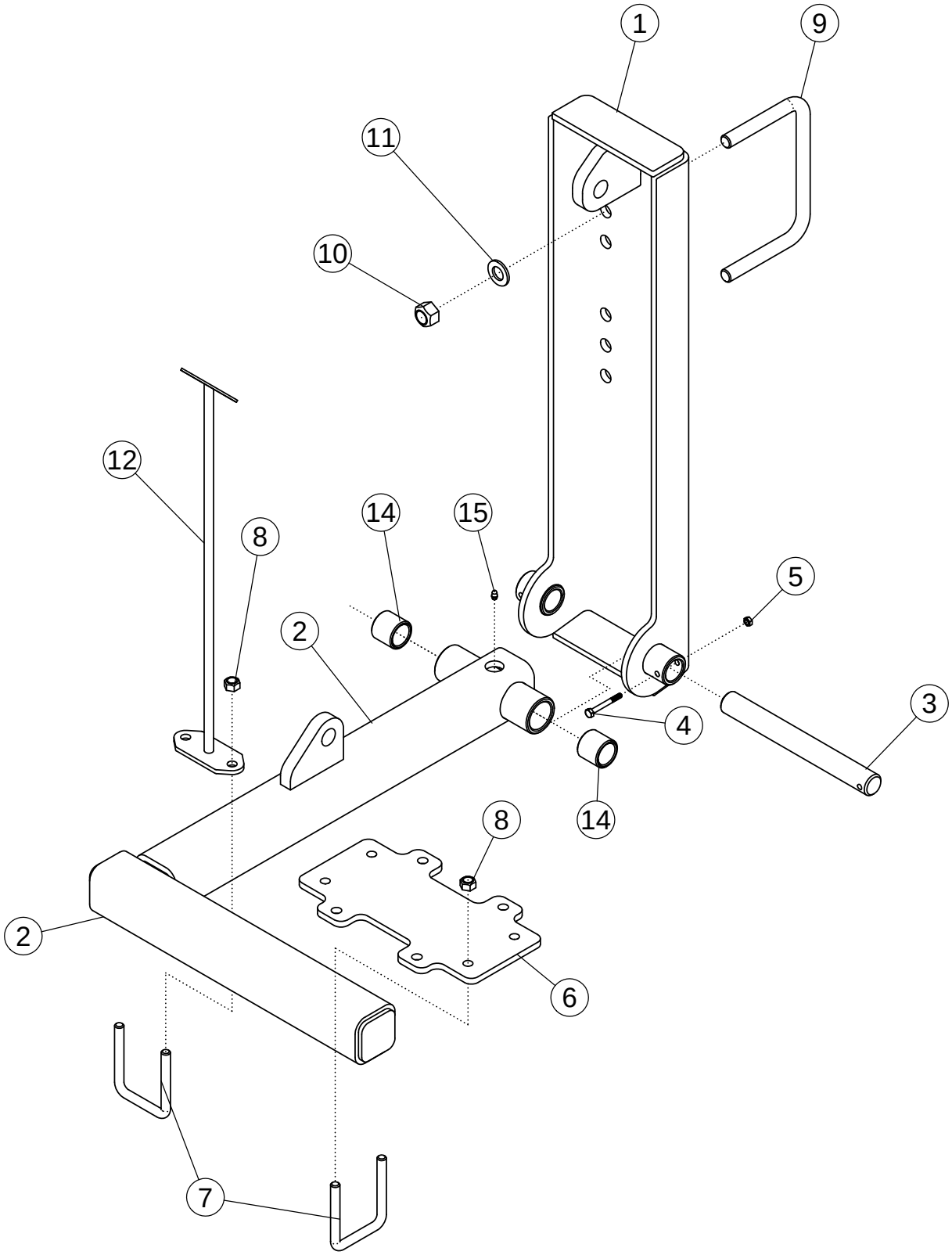
1
9
11
10
12
14
15
8
5
2
3
4
14
8
2
6
7

ASSY - DEF ROW FINDER MOUNT

ITEM	PART NO.	DESCRIPTION	QTY
1	305057	WLDMT-ROW FINDER MOUNT UPPER	1
2	305058-1	WLDMT-ROW FINDER LOWER W/ BUSHINGS	1
3	305053	SHAFT-ROW FINDER	1
4	1013942	BOLT-HEX: .25 X 2.25 NC GR5	1
5	1030946	NUT-TOPLOCK: .25 NC GR5 ZP	1
6	305056	PLATE-DEF FR MOUNT (1 ROW)	1
7	69954	U-BOLT: .500 X 4.00 X 3 X 4.00	3
8	1027461	NUT-TOPLOCK: .50 NC GR5 ZP	6
9	56263	U-BOLT: .75 X 5.5 X 8 X 5.5	2
10	1017000	NUT-TOPLOCK: .75 NC GR5 ZP	4
11	1012634	WASHER-FLAT: SAE .75 ZP	4
12	305410	WLDMT-INDICATOR RF FRAME MOUNT	1
13	65332	DECAL-RED/ORANGE FLUORESCENT (NOT SHOWN)	1
14	56939	BUSHING-OILITE: 1.25 X 1.625 X 1.5L	2
15	1011748	ZERK-GREASE: .25 UNF STRAIGHT	1

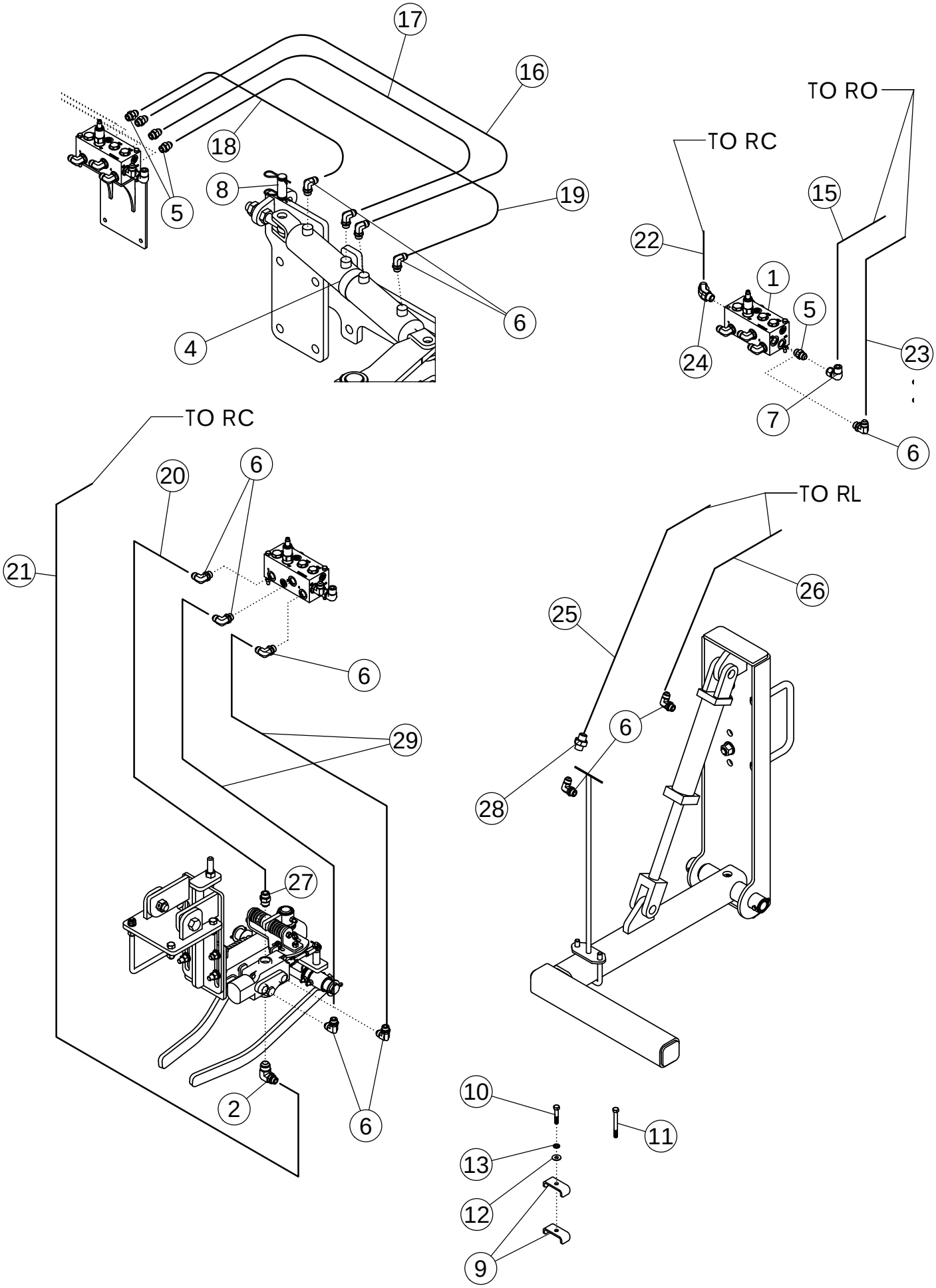
17
16
18
5
8
19
4
6
TO RO
TO RC
15
22
1
5
24
23
7
6
TO RC
20
6
21
6
29
27
2
6
TO RL
26
25
6
28
10
11
13
12
9

ROW FINDER HYDRAULICS - FRAME MOUNTED

ITEM	PART NO.	DESCRIPTION	QTY
1	69999	VALVE-DEF ROWFINDER RETURN	1
2	65901	FTG-ELBOW: 10MB-8MJ-90	1
3	58195	FTG-ADAPTER: 10MB-8MJ	1
4	69200	CYLINDER-HYD 3 X 4 4PORT 23.5 CLOSED	1
5	56226	FTG-ADAPTER: 8MB-8MJ	6
6	58560	FTG-ELBOW: 8MB-8MJ 90	12
7	57668	FTG-ELBOW: 8MJ-8FJX 90	1
8	69167	PIN-CLYNDER W/CLIPS 1.00 X 2.25	2
9	50714	CLAMP .50" ZP	10
10	1011603	BOLT-HEX: .38 X 1.75 NC GR5 ZP	1
11	1013239	BOLT-HEX: .38 X 3.00 NC GR5 ZP	4
12	1014608	WASHER-FLAT: SAE .38 ZP	5
13	1011586	WASHER-LOCK: .38 ZP	5
14	300254	HOSE: .50 X 076 8JX-8FJX	2
15	305677	HOSE: .50 X 027 8FJX-8FJX90L	1
16	69654	HOSE: .50 X 108 8FJX-8FJX90 (9R/12R)	1
	305043	HOSE: .50 X 086 8FJX-8FJX90 (6R/8R)	
17	69565	HOSE: .50 X 108 8FJX-8FJX90L (9R/12R)	1
	305044	HOSE: .50 X 086 8FJX-8FJX90L (6R/8R)	
18	69566	HOSE: .50 X 114 8FJX-8FJX90L (9R/12R)	1
	305045	HOSE: .50 X 092 8FJX-8FJX90L (6R/8R)	
19	69567	HOSE: .50 X 102 8FJX-8FJX90 (9R/12R)	1
	305046	HOSE: .50 X 080 8FJX-8JFX90 (6R/8R)	
20	305679	HOSE: .50 X 074 10FJX-8FJX90	1
21	64265	HOSE: .50 X 072 8FJX-8FJX90	1
22	305675	HOSE: .50 X 017 8FJX-8FJX	1
23	305676	HOSE: .50 X 027 8FJX-8FJX90	1
24	58515	FTG-ELBOW: 8MB-8MJ-45	1
25	67379	HOSE: .38 X 033 8FJX-8FJX	1
26	305669	HOSE: .38 X 027 8FJX-8FJX90	1
27	62019	FTG: ADAPTER: 10MB-10MJ	1
28	1019844	FTG-RESTRICTOR 8FJ-8MJ .090	1

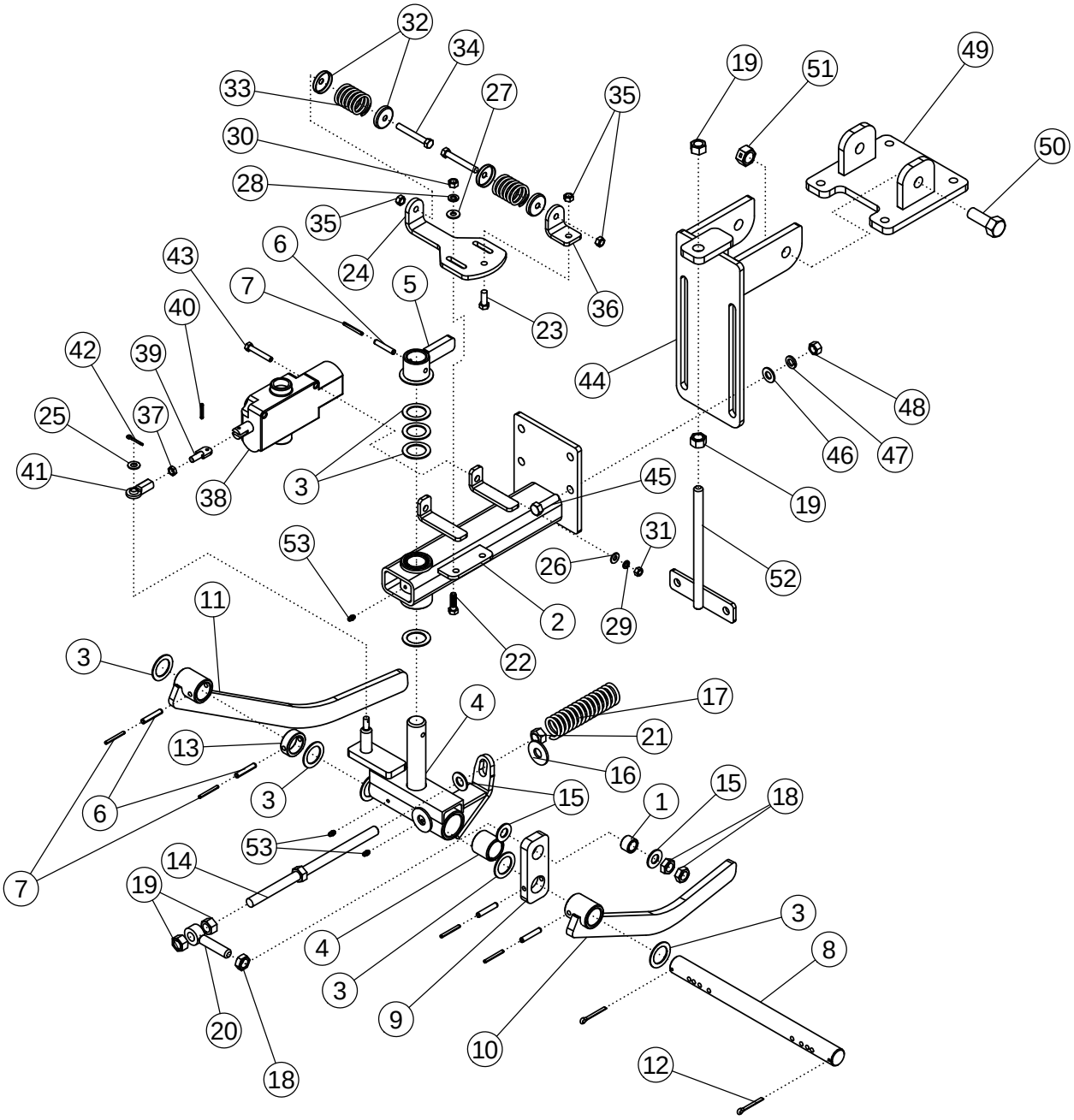
32
34
33
27
35
19
51
49
30
50
28
35
24
36
6
43
7
5
23
40
42
39
44
48
25
37
46
47
41
38
3
45
19
53
31
26
52
2
29
11
22
3
4
17
21
13
16
3
15
15
1
18
6
53
14
7
19
4
3
3
8
20
9
10
18
12

HYDRAULIC ROW FINDER

ITEM	PART NO.	DESCRIPTION	QTY
1	52567	BUSHING-ZP	1
2	62520	ASSY-MAIN FRAME	1
3	55206	BUSHING-MACH: 1.25 NR 14GA	9
4	51139	ASSY - SWIVEL	1
5	51130	WLDMT-FLIPPER	1
6	1030793	PIN-ROLL: .31 X 1.75 ZP	5
7	1030798	PIN-ROLL: .19 X 1.75 ZP	5
8	51690	SHAFT ZP	1
9	52566	TENSIONER ARM	1
10	51131	SENSOR ARM-L.H.	1
11	52564	SENSOR ARM-R.H.	1
12	1030797	PIN-COTTER: .19 X 1.75 NP	2
13	51137	COLLAR	1
14	52565	ADJUSTMENT BOLT	1
15	1013004	WASHER-FLAT: SAE .63 ZP	3
16	1013024	WASHER-FLAT: .63 ZP	2
17	51692	SPRING: .21 X 1.44 OD X 6.00 15 COILS	1
18	1026259	NUT-JAM: .63 NC GR2 ZP	3
19	1011578	NUT-HEX: .63 NC GR2 ZP	4
20	51691	EYEBOLT: .63 X 3.25 ZP	1
21	1016595	NUT-TOPLOCK: .63 NC GR5 ZP	1
22	1011601	BOLT-HEX: .38 X 1.25 NC GR5 ZP	2
23	1011600	BOLT-HEX: .38 X 1.00 NC GR5 ZP	1
24	51129	PLATE	1
25	1014608	WASHER-FLT: SAE .38 ZP	1
26	1020416	WASHER-FLAT: .25 ZP	2
27	1011583	WASHER-FLAT: .31 ZP	2
28	1011586	WASHER-LOCK: .38 ZP	2
29	1029115	WASHER-LOCK: .31 ZP	2
30	1011576	NUT-HEX: .38 NC GR2 ZP	2
31	1011575	NUT-HEX: .31 NC GR2 ZP	2
32	52582	SPRING CAP	4
33	51689	SPRING	2
34	1019828	BOLT-HEX: .38 X 2.75 NC GR5 ZP	2
35	1016999	NUT-TOPLOCK: .38 NC GR5 ZP	3
36	51128	SPRING PLATE	1
37	1030792	NUT-JAM: .38 NF GR2 ZP	1
38	301150	VALVE-ROWFINDER O/C	1
39	62540	PLATE STUD ZP	1
40	64157	PIN-ROLL: .19 X 1.125 ZP	1

CONTINUED

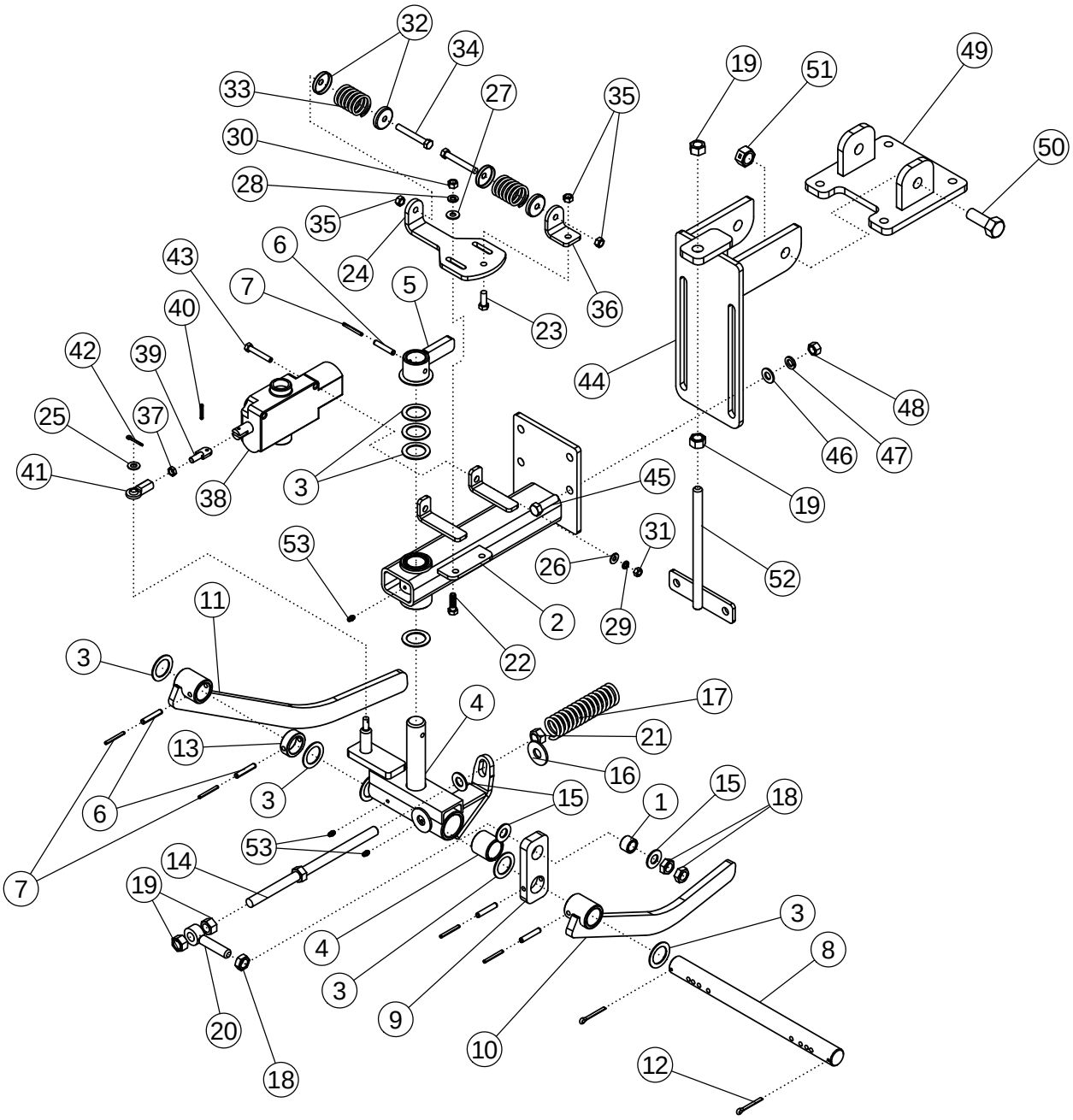
32
34
33
27
35
19
51
49
30
50
28
35
6
24
36
43
7
5
23
40
42
39
44
48
25
37
46
47
41
38
3
45
19
53
31
26
52
2
29
11
22
3
4
17
21
13
16
3
15
15
1
18
6
53
14
7
19
4
3
3
8
20
9
10
18
12

HYDRAULIC ROW FINDER (CONTINUED)

ITEM	PART NO.	DESCRIPTION	QTY
41	51136	UNIBALL COUPLING	1
42	1029137	PIN-COTTER: .13 X 1.00 ZP	1
43	1011285	BOLT-HEX : .31 X 2.00 NC	2
44	52181	MOUNTING BRACKET	1
45	1011608	BOLT-HEX: .50 X 1.75 NC GR5 ZP	4
46	1011584	WASHER-FLAT: SAE .50 ZP	4
47	1011581	WASHER-LOCK: .50 ZP	8
48	1011577	NUT-HEX: .50 NC GR2 ZP	8
49	62871	WLDMT-BRACKET	1
50	1012060	BOLT-HEX: .75 X 2.00 NC GR5 ZP	2
51	1013537	NUT-TOPLOCK: .75 NC GR5 ZP	2
52	62882	TIGHTENER BOLT-ZP	1
53	1011748	ZERK - GREASE	3

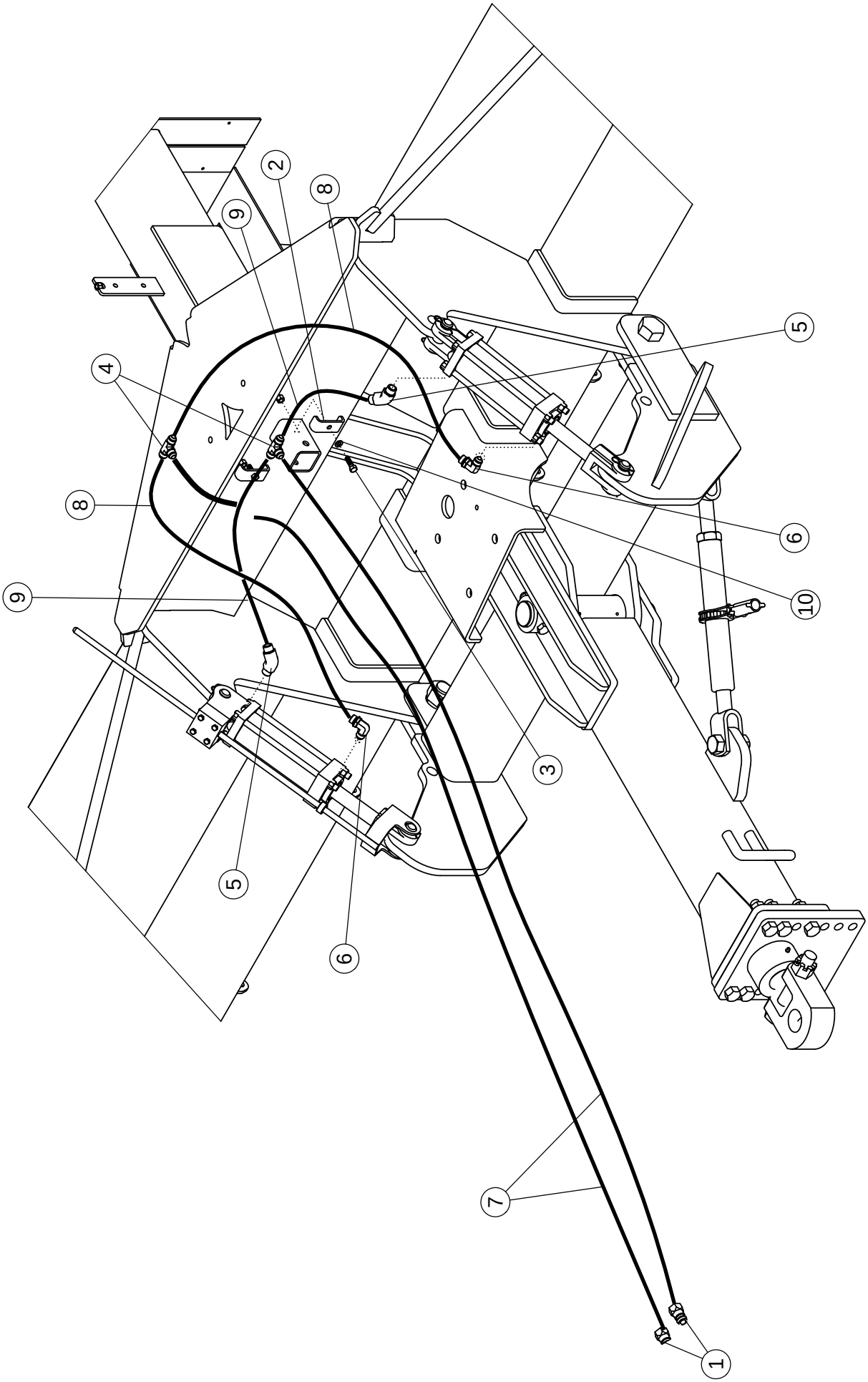
1
2
3
4
5
6
7
8
9
10

HITCH HYDRAULICS

ITEM	PART NO.	DESCRIPTION	QTY
1	36290	PIONEER TIP 8010-15 (#8 ORB)	2
2	50714	CLAMP .50 ZP	14
3	1011601	BOLT-HEX: .38 X 1.25 NC GR5 ZP	2
4	57667	FTG-TEE: 8MJ-8MJ-8MJ	2
5	58515	FTG-ELBOW: 8MB-8MJ-45	2
6	58560	FTG-ELBOW: 8MB-8MJ-90	2
7	300053	HOSE: .50 X 108 8MB-8FJX	2
8	57000	HOSE .50 X 34 8FJX-8FJX	2
9	44174	HOSE: .50 X 24 8FJX-8FJX	2
10	1011586	WASHER-LOCK: .38 ZP	2

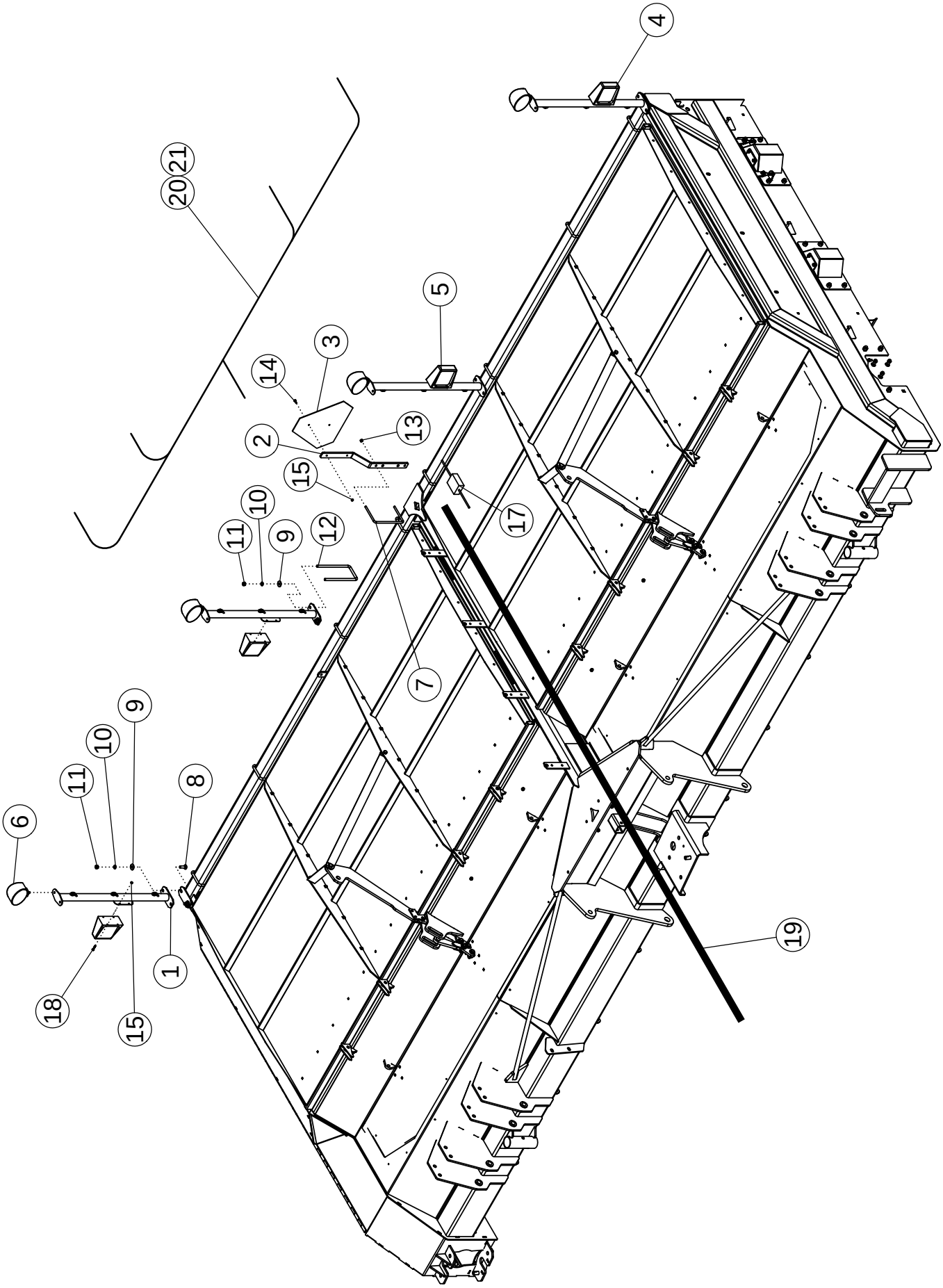
4
21
20
5
3
14
13
2
15
17
10
11
9
12
7
9
10
11
8
6
1
18
15
19

LIGHT KIT

ITEM	PART NO.	DESCRIPTION	QTY
1	305219	WLDMT-LIGHT MOUNT	4
2	64246	MOUNT-SMV SIGN	1
3	65329	SIGN-SMV ASAE	1
4	305217	LIGHT-YELLOW LAMP SAE	2
5	305218	LIGHT-RED LAMP SAE	2
6	301293	LIGHT-GROTE 1200 OVAL FLOOD	4
7	64244	U-BOLT: .375 X 5.125 X 8.063 X 5.125	1
8	1011660	BOLT-CRG: .50 X 1.50 NC GR5 ZP	4
9	1014443	WASHER-FLAT: .50 ZP	8
10	1011581	WASHER-LOCK: .50 ZP	8
11	1011577	NUT-HEX: .50 NC ZP	8
12	63458	U-BOLT: .50 X 9.25 X 4.00 X 9.25 ZP	2
13	1016999	NUT-TOPLOCK: .38 NC GR5 ZP	2
14	1011595	BOLT-HEX: .25 X .75 NC GR5 ZP	2
15	1030946	NUT-TOPLOCK: .25 NC GR5 ZP	18
16	1013122	TIE-NYLON CABLE 50# X 15.50" (NOT SHOWN)	12
17	305216	MODULE-FLASHER HARNESS	1
18	1013940	BOLT-HEX: .25 X 1.25 NC GR5	16
19	305213	HARNESS-DEF LIGHT LEAD	1
20	305214	HARNESS-DEF WORK LIGHT	1
21	305215	HARNESS-DEF LGIHT	1

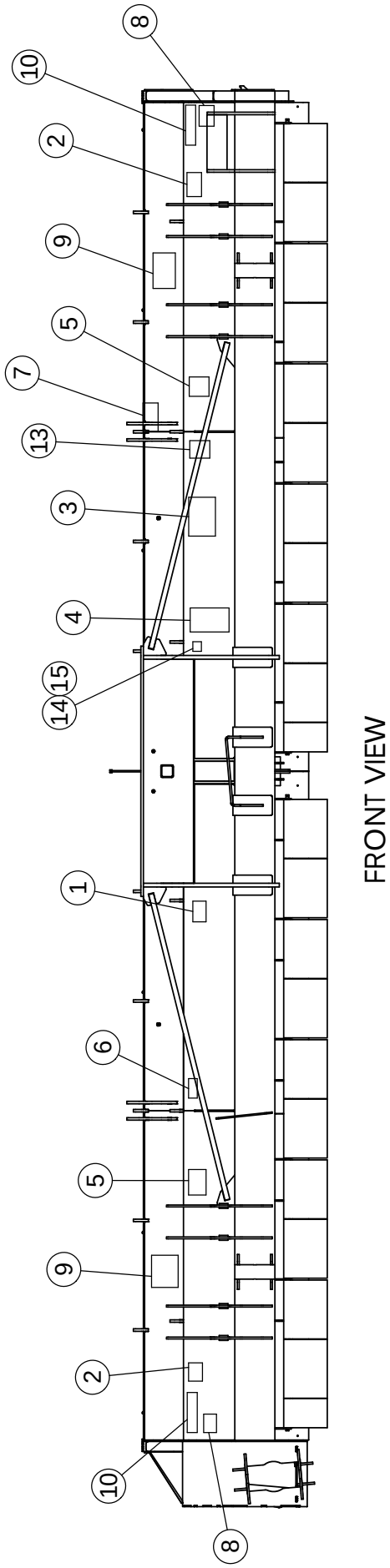

FRONT VIEW

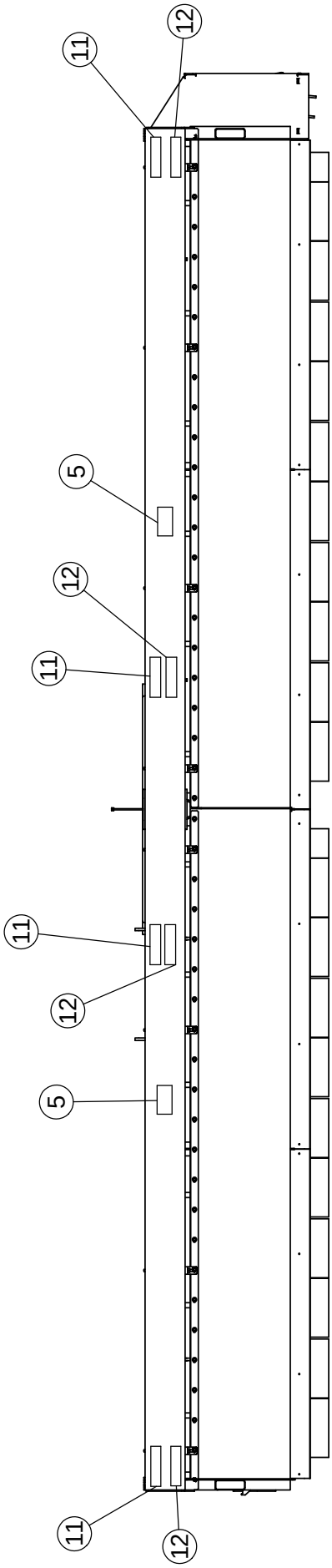

REAR VIEW

DECALS

ITEM	PART NO.	DESCRIPTION	QTY
1	52341	DECAL-WARNING	1
2	52334	DECAL-WARNING	2
3	52329	DECAL-DANGER	1
4	52339	DECAL-WARNING	1
5	52340	DECAL-DANGER	4
6	52338	DECAL DANGER	1
7	52336	DECAL-CAUTION	4
8	64617	DECAL-DANGER	2
9	63465	DECAL-LOGO	2
10	65331	DECAL-RETROFLECTIVE-YELLOW	2
11	65330	DECAL-RETROFLECTIVE-RED	4
12	65332	DECAL-RED ORANGE FLUORESCENT	2
13	62964	DECAL-WARNING	1
14	1028371	TAG: SERIAL#/MODEL#/YEAR	1
15	59882	RIVET-POP: .13 X .31 ZP	2

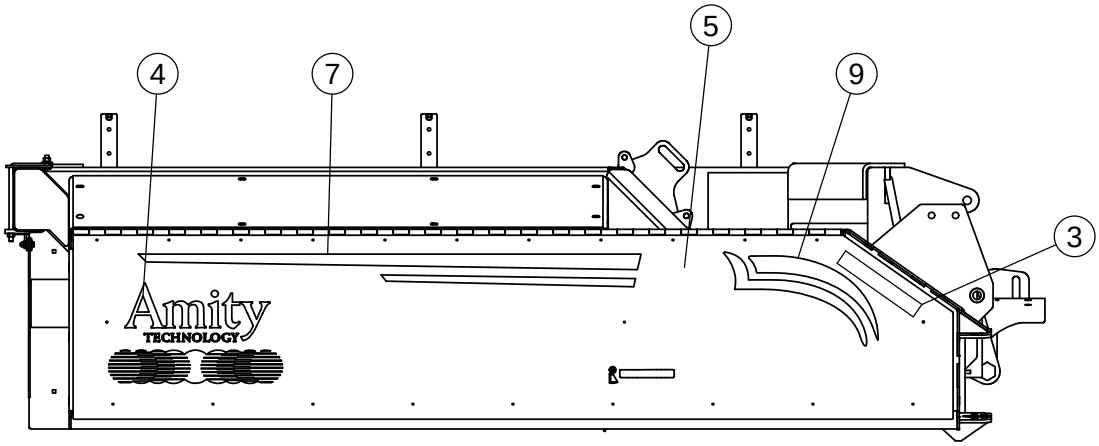

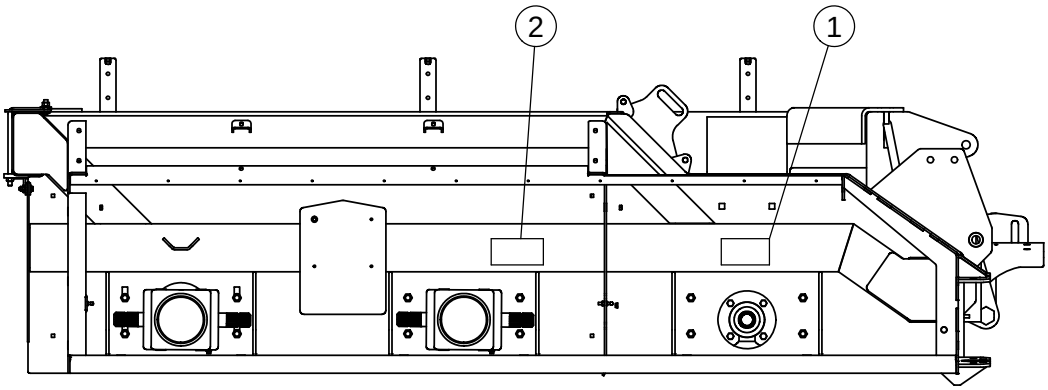

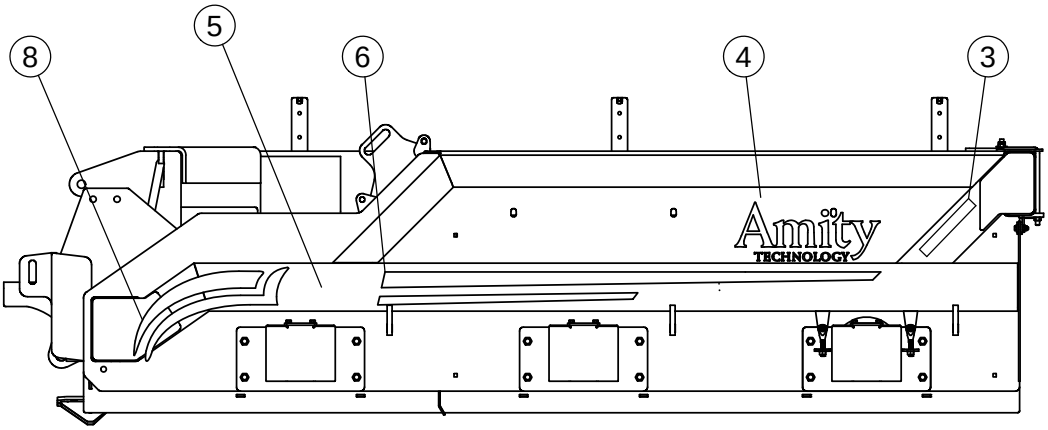

LEFT SIDE

DECALS

ITEM	PART NO.	DESCRIPTION	QTY
1	52341	DECAL-WARNING SHIELDS	1
2	52329	DECAL-DANGER MOVING PART	1
3	65331	DECAL-YELLOW RETROFLECTIVE	2
4	69399	DECAL-AMITY LOGO 12X24	2
5	305692	DECAL-3750 6X12 DECAL-3550 6X12	2
6	69406	DECAL-LH STRIPE	1
7	69408	DECAL-RH STRIPE	1
8	69405	DECAL-LH CURVE	1
9	69407	DECAL-RH CURVE	1

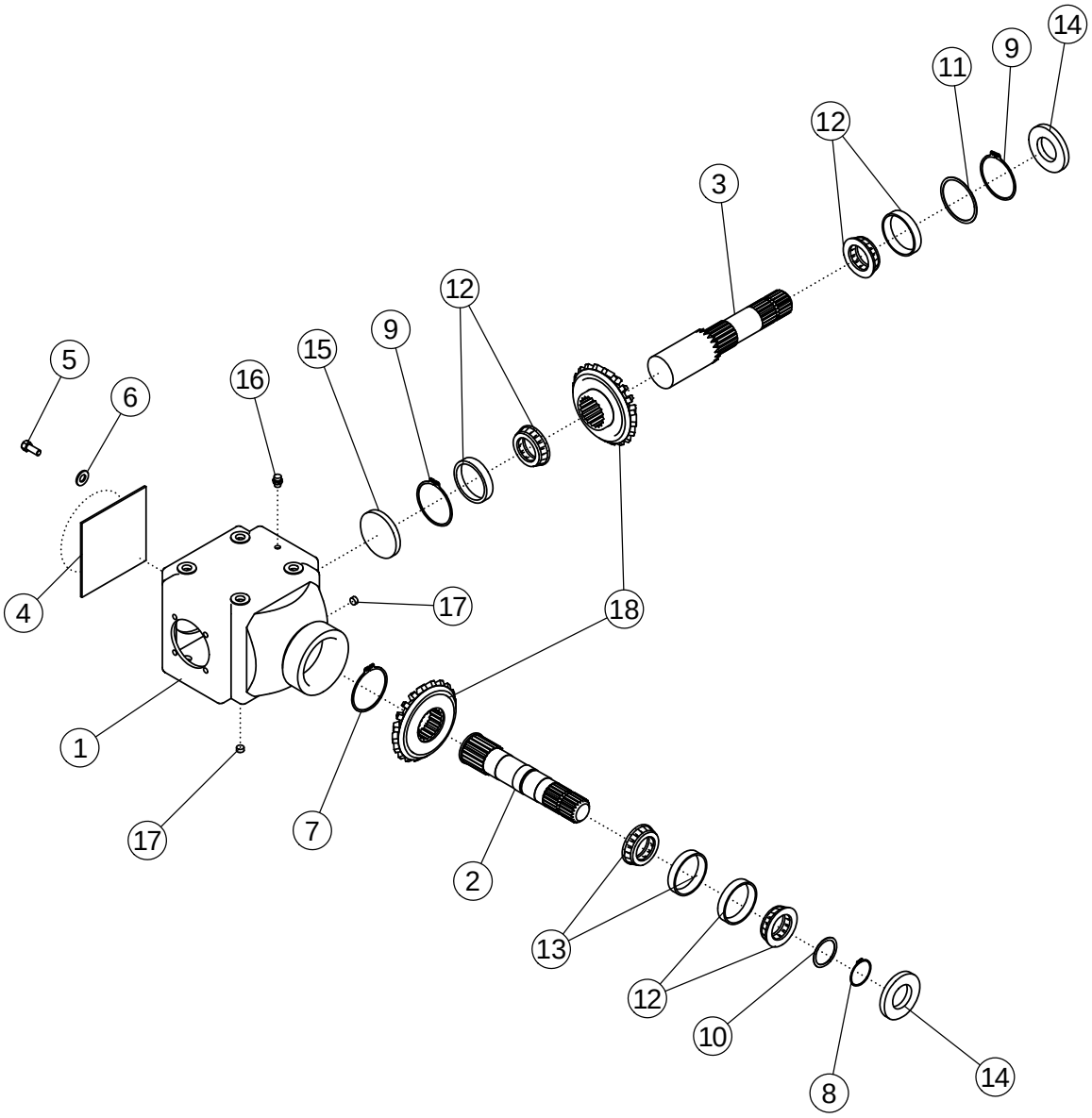
14
9
11
12
3
12
9
15
16
5
6
4
17
18
1
17
7
2
13
12
10
8
14

GEARBOX L-TYPE

ITEM	PART NO.	DESCRIPTION	QTY
--	**68065**	**GEARBOX-S2125 1.35:1 L**	**-**
1	68181	HOUSING	1
2	68182	SHAFT	1
3	68183	INPUT SHAFT	1
4	68184	SLEEVE	1
5	68185	SCREW-BOLT HEX M10 X 25 CL8.8	8
6	68186	WASHER	8
7	52521	SNAP RING: EXTERNAL	1
8	54209	SNAP RING	1
9	54210	SNAP RING	2
10	54218	SPACER RING - - .012 PER M THICKNESS	AR
	54219	SPACER RING - - .016 PER M THICKNESS	
	54220	SPACER RING - - .024 PER M THICKNESS	
	54221	SPACER RING - - .032 PER M THICKNESS	
	54222	SPACER RING -- .040 PER M THICKNESS	
	64421	KIT-SPACER RING (INCLUEDES SPACERS IN ITEM 10)	
11	54223	SPACER RING - - .012 PER M THICKNESS	AR
	54224	SPACER RING - - .016 PER M THICKNESS	
	54225	SPACER RING - - .024 PER M THICKNESS	
	54226	SPACER RING - - .032 PER M THICKNESS	
	59958	SPACER RING - - 1.00 PER M THICKNESS	
	64422	KIT-SPACER RING (INCLUEDES SPACERS IN ITEM 11)	
12	54212	BEARING ROLLER	3
13	68187	BEARING ROLLER	1
14	54214	SEALING RING	2
15	54217	CLOSING CAP	1
16	54204	VENT PLUG	1
17	54215	OIL PLUG	5
18	68188	BEVEL GEAR SET*	1
		*SET INCLUDES GEAR CROWN & GEAR PINNION	

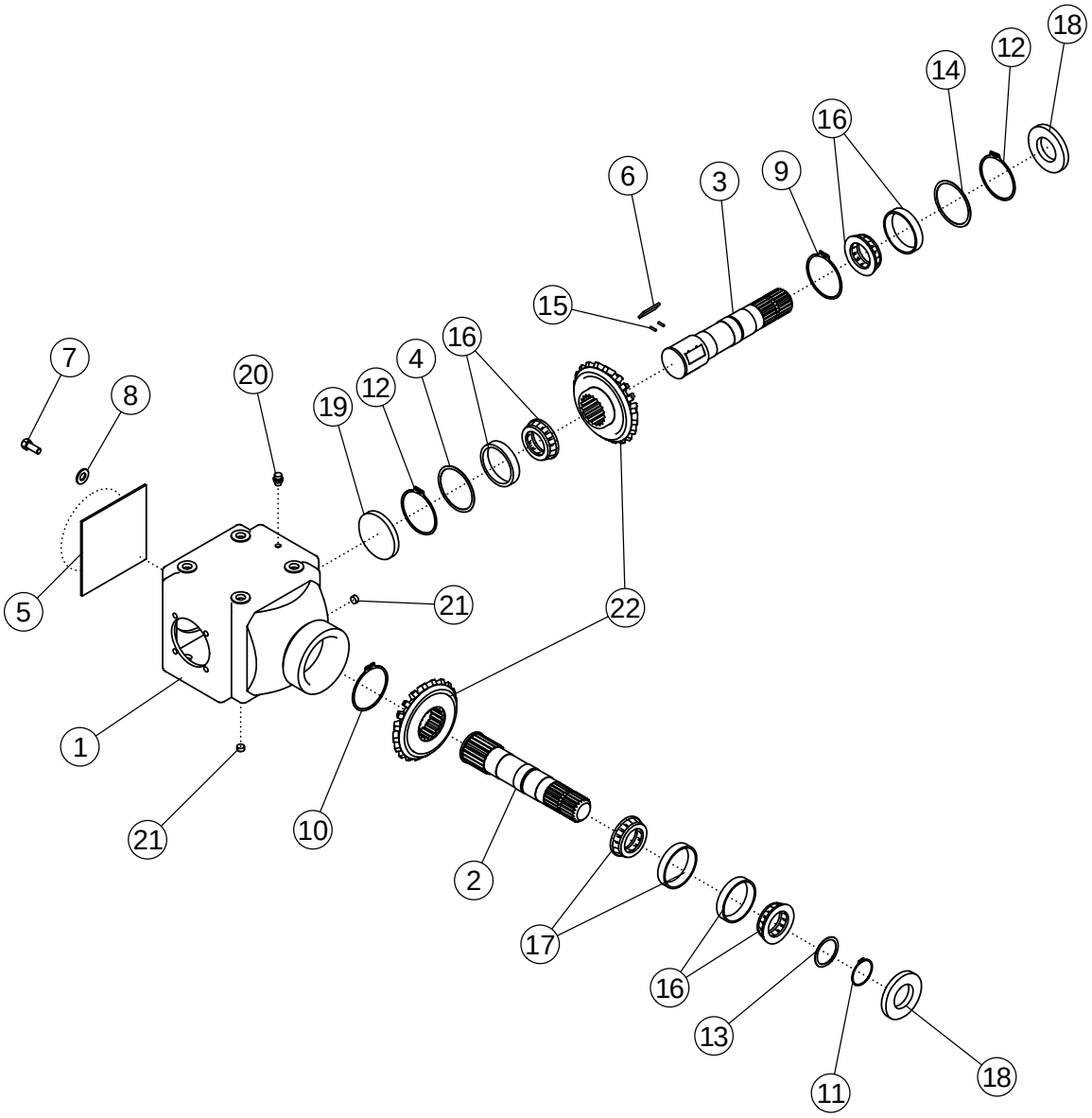
18
12
14
16
6
3
9
15
16
4
12
20
7
8
19
5
21
22
1
21
10
2
17
16
13
11
18

GEARBOX L-TYPE WITH OVERRUN

ITEM	PART NO.	DESCRIPTION	QTY
--	**68066**	**GEARBOX-S2125 1.35:1 L W/OVER RUN CLUTCH**	**-**
1	68181	HOUSING	1
2	68182	SHAFT	1
3	68189	SHAFT-OUTPUT	1
4	68190	SLEEVE	1
5	68184	SLEEVE	1
6	68191	PLUG	6
7	68185	SCREW-BOLT HEX M10 X 25 CL8.8	8
8	68186	WASHER	8
9	68196	SNAP RING-EXTERNAL	1
10	52521	SNAP RING: EXTERNAL	1
11	54209	SNAP RING	1
12	54210	SNAP RING	2
13	54218	SPACER RING - - .012 PER M THICKNESS	AR
	54219	SPACER RING - - .016 PER M THICKNESS	
	54220	SPACER RING - - .024 PER M THICKNESS	
	54221	SPACER RING - - .032 PER M THICKNESS	
	54222	SPACER RING -- .040 PER M THICKNESS	
	64421	KIT-SPACER RING (INCLUEDES SPACERS IN ITEM 10)	
14	54223	SPACER RING - - .012 PER M THICKNESS	AR
	54224	SPACER RING - - .016 PER M THICKNESS	
	54225	SPACER RING - - .024 PER M THICKNESS	
	54226	SPACER RING - - .032 PER M THICKNESS	
	59958	SPACER RING - - 1.00 PER M THICKNESS	
	64422	KIT-SPACER RING (INCLUEDES SPACERS IN ITEM 11)	
15	59960	SPRING-GEARBOX SHAFT	12
16	54212	BEARING ROLLER	3
17	68187	BEARING ROLLER	1
18	54214	SEALING RING	2
19	54217	CLOSING CAP	1
20	54204	VENT PLUG	1
21	54215	OIL PLUG	5
22	68192	BEVEL GEAR SET*	1
		*SET INCLUDES GEAR CROWN & GEAR PINNION	

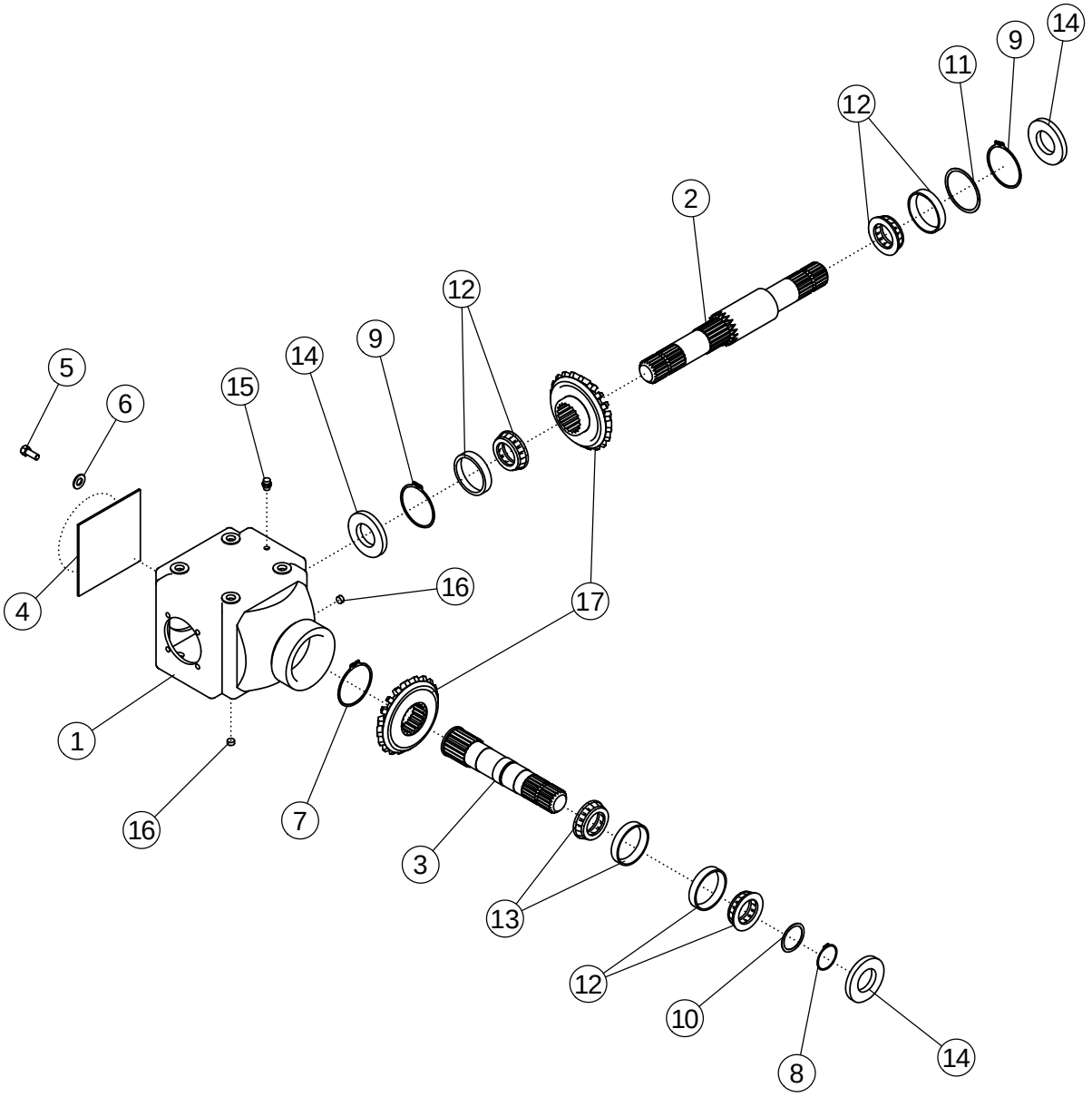
14
9
11
12
2
12
9
14
5
15
6
4
16
17
1
16
7
3
13
12
10
8
14

GEARBOX T-TYPE

ITEM	PART NO.	DESCRIPTION	QTY
--	**68067**	**GEARBOX-S2125 1.35:1 T**	**-**
1	68181	HOUSING	1
2	68193	SHAFT-THRU	1
3	68194	SHAFT	1
4	68184	SLEEVE	1
5	68185	SCREW-BOLT HEX M10 X 25 CL8.8	8
6	68186	WASHER	8
7	52521	SNAP RING: EXTERNAL	1
8	54209	SNAP RING	1
9	54210	SNAP RING	2
10	54218	SPACER RING - - .012 PER M THICKNESS	AR
	54219	SPACER RING - - .016 PER M THICKNESS	
	54220	SPACER RING - - .024 PER M THICKNESS	
	54221	SPACER RING - - .032 PER M THICKNESS	
	54222	SPACER RING -- .040 PER M THICKNESS	
	64421	KIT-SPACER RING (INCLUEDES SPACERS IN ITEM 10)	
11	54223	SPACER RING - - .012 PER M THICKNESS	AR
	54224	SPACER RING - - .016 PER M THICKNESS	
	54225	SPACER RING - - .024 PER M THICKNESS	
	54226	SPACER RING - - .032 PER M THICKNESS	
	59958	SPACER RING - - 1.00 PER M THICKNESS	
	64422	KIT-SPACER RING (INCLUEDES SPACERS IN ITEM 11)	
12	54212	BEARING ROLLER	3
13	68187	BEARING ROLLER	1
14	54214	SEALING RING	2
15	54204	VENT PLUG	1
16	54215	OIL PLUG	5
17	68188	BEVEL GEAR SET*	1
		*SET INCLUDES GEAR CROWN & GEAR PINNION	

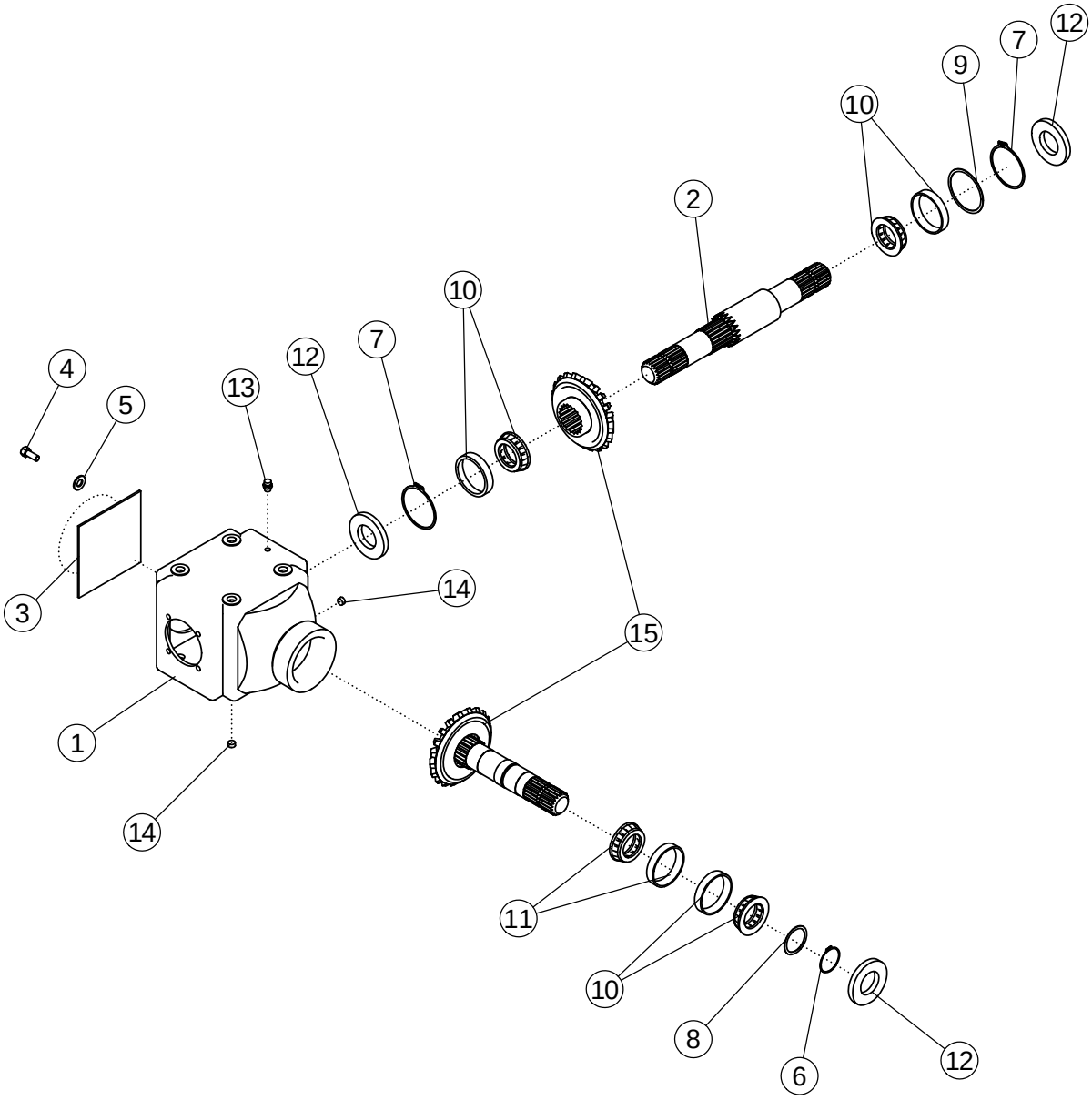
12
7
9
10
2
10
7
12
13
5
4
3
14
15
1
14
11
10
8
6
12

GEARBOX T-TYPE

ITEM	PART NO.	DESCRIPTION	QTY
--	**68068**	**GEARBOX-S2125 1:1.93 T**	**-**
1	68181	HOUSING	1
2	68193	SHAFT-THRU	1
3	68184	SLEEVE	1
4	68185	SCREW-BOLT HEX M10 X 25 CL8.8	8
5	68186	WASHER	8
6	54209	SNAP RING	1
7	54210	SNAP RING	2
8	54218	SPACER RING - - .012 PER M THICKNESS	AR
	54219	SPACER RING - - .016 PER M THICKNESS	
	54220	SPACER RING - - .024 PER M THICKNESS	
	54221	SPACER RING - - .032 PER M THICKNESS	
	54222	SPACER RING -- .040 PER M THICKNESS	
	64421	KIT-SPACER RING (INCLUEDES SPACERS IN ITEM 10)	
9	54223	SPACER RING - - .012 PER M THICKNESS	AR
	54224	SPACER RING - - .016 PER M THICKNESS	
	54225	SPACER RING - - .024 PER M THICKNESS	
	54226	SPACER RING - - .032 PER M THICKNESS	
	59958	SPACER RING - - 1.00 PER M THICKNESS	
	64422	KIT-SPACER RING (INCLUEDES SPACERS IN ITEM 11)	
10	54212	BEARING ROLLER	3
11	68187	BEARING ROLLER	1
12	54214	SEALING RING	2
13	54204	VENT PLUG	1
14	54215	OIL PLUG	5
15	68195	BEVEL GEAR SET*	1
		*SET INCLUDES GEAR CROWN & GEAR PINNION	

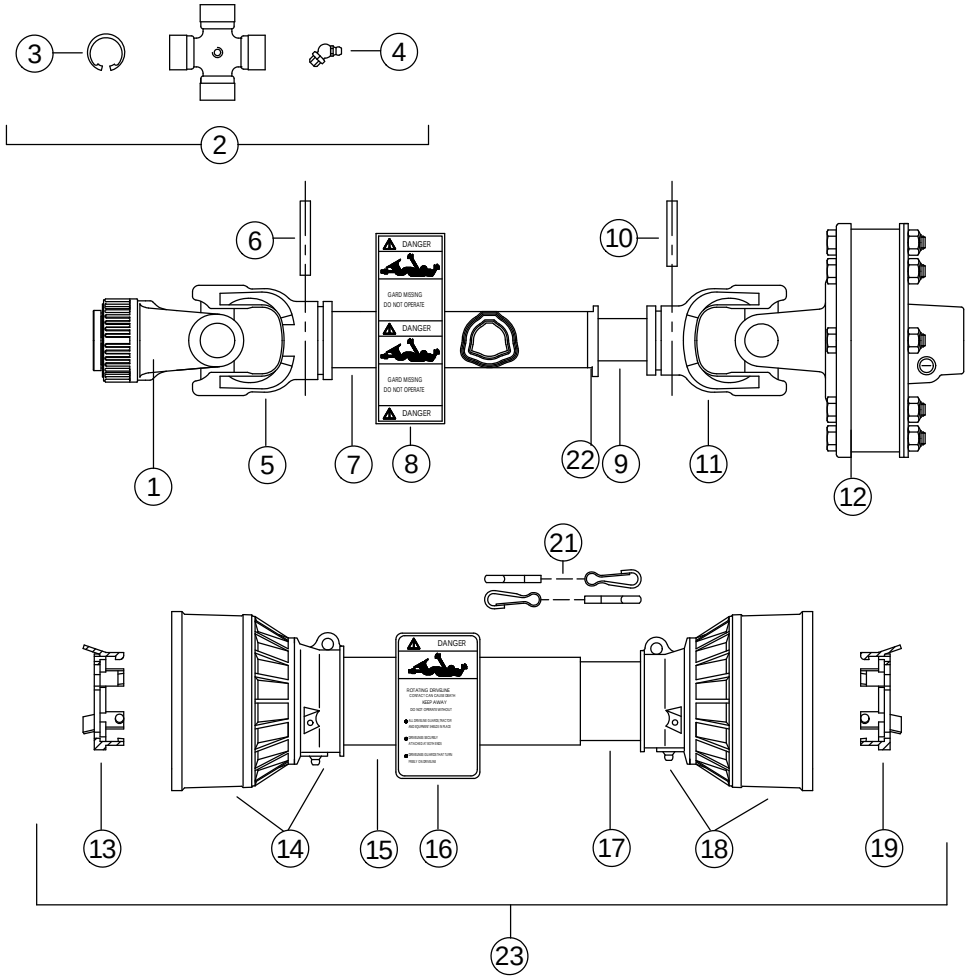
3
4
2
6
10
DANGER
GARD MISSING
DO NOT OPERATE
DANGER
GARD MISSING
DO NOT OPERATE
DANGER
1
5
7
8
22
9
11
12
21
DANGER
ROTATING DRIVELINE
CONTACT CAN CAUSE DEATH
KEEP AWAY!
DO NOT OPERATE WITHOUT
DRIVELINE GUARD, TRACTOR
AND EQUIPMENT SHIELD IN PLACE
BEFORE SECURING
ATTACHED EQUIPMENT
BEFORE ELIMINATING PLAY IN
TRACTOR DRAWBAR
13
14
15
16
17
18
19
23

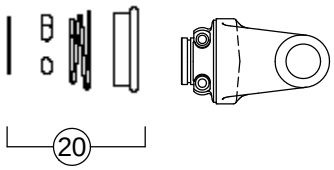
20

STANDARD PTO 1.375-21 #69679
1.75-20 #69680

ITEM	PART NO	DESCRIPTION	QTY
1	54198	YOKE-STD 1.375	1
	69866	YOKE-STD 1.75	
2	54235	CROSS KIT	2
3	55361	CIRCLIP	8
4	63440	GREASE NIPPLE	2
5	54242	YOKE-OUTER TUBE	1
6	55364	FLEXIBLE PIN	1
7	69867	TUBE OUTER	1
8	63293	DECAL-DRIVELINE	1
9	69868	TUBE INNER	1
10	55367	FLEXIBLE PIN	1
11	54234	YOKE INNER TUBE	1
12	305198	CLUTCH-TORQUE LIMITER	1
13	54238	BRG RING-OUTER SHIELD	1
14	54199	SHIELD CONE-OUTER	1
15	69869	OUTER SHIELD	1
16	63294	DECAL-DRIVELINE	1
17	69870	INNER SHIELD	1
18	55320	CONE SET-INNER SHIELD	1
19	54240	BRG RING-INNER SHIELD	1
20	69871	KIT-BALL COLLAR 1.375	1
	69872	KIT-BALL COLLAR 1.75	
21	69873	CHAIN-COMPLETE	2
22	69874	COLLAR-GREASE	1
23	69875	KIT-SHIELD COMPLETE W/CHAINS	1

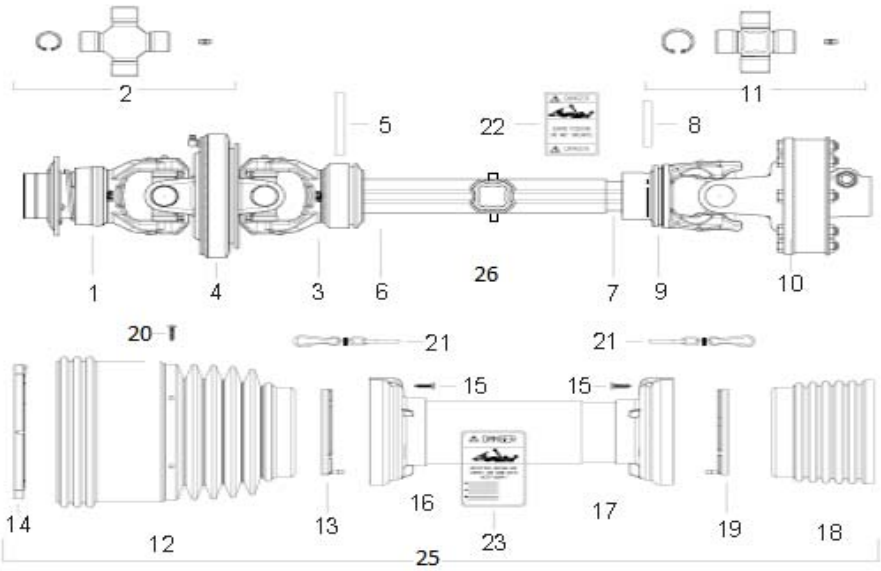
2
11
5
22
8
1
4
3
6
26
7
9
10
20
21
21
15
15
14
12
13
16
23
17
19
18
25

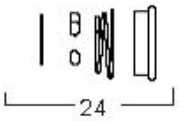
24

PTO CV 1-3/8-21 #69681
& 1-3/4-20 #69682

ITEM	PART NO.	DESCRIPTION	QTY
1	68758	YOKE-CV 1.375	1
	68734	YOKE-CV 1.750	
2	68735	CROSS-KIT	1
3	68736	YOKE-CV OUTER EXT TUBE	1
4	68737	CENTRAL BODY-CV JOINT	1
5	68738	PIN-ROLL	1
6	69684	TUBE-DRIVE OUTER (CV)	1
7	69685	TUBE-DRIVE INNER (CV)	1
8	68741	PIN-ROLL	1
9	68742	YOKE-CV INNER TUBE	1
10	305196	CLUTCH-TORQUE LIMITER (CV)	1
11	68744	CROSS-KIT	1
12	68745	CONE-SHIELD OUTER	1
13	68746	BEARING-SHIELD OUTER	1
14	68747	BEARING-SHIELD CONE	1
15	68748	SCREW-SELF TAPPING	6
16	68749	SHIELD-SAFETY TUBE OUTER	1
17	68750	SHIELD-SAFETY TUBE INNER	1
18	68751	CONE-SHIELD INNER	1
19	68752	BEARING-SHIELD INNER	1
20	69688	SCREW-SELF TAPPING FLANGE HEAD	6
21	69689	CHAIN-COMPLETE	2
22	63293	DECAL-DRIVELINE	1
23	63294	DECAL-DRIVELINE	1
24	69690	KIT-BALL COLLAR 1.375 (CV)	1
	68755	KIT-BALL COLLAR 1.750 (CV)	
25	68760	KIT-SHIELD COMPLETE W/CHAINS	1
26	69687	ZERK-GREASE: M6 X 1 SHORT	2

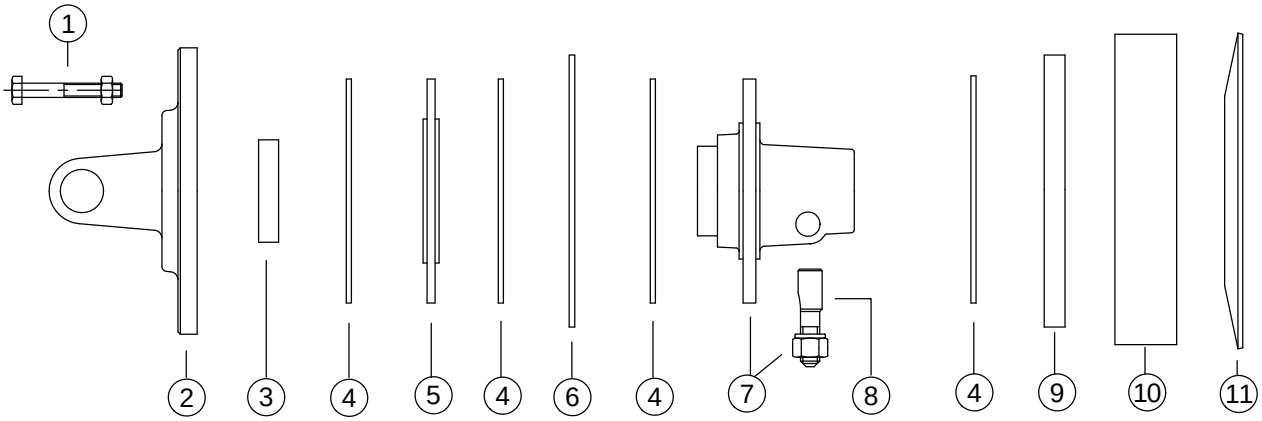
1
2
3
4
5
4
6
4
7
8
4
9
10
11

CLUTCH TORQUE LIMITER #305196(CV) & #305198(STD)

ITEM	PART NO.	DESCRIPTION	QTY
1	63300	SCREW	8
2	69693	YOKE-FLANGE (CV)	1
	69864	YOKE-FLANGE (STD)	
3	63295	BUSHING	1
4	69692	LINING	4
5	69858	PLATE-LINING	1
6	69859	PLATE-INNER	1
7	69860	HUB	1
8	68782	KIT-TAPER PIN	1
9	69861	PLATE-THRUST	1
10	69862	SPACER	1
11	305197	SPRING	1

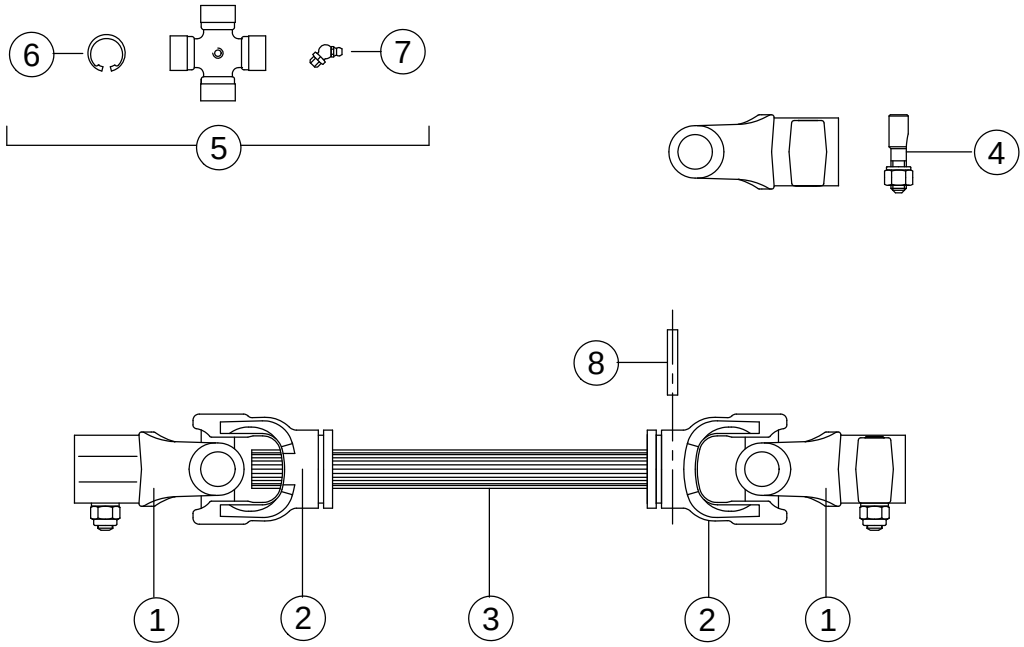
6
7
5
4
8
1
2
3
2
1

SIDE DRIVELINE #52397

ITEM	PART NO.	DESCRIPTION	QTY
1	68731	TRACTOR YOKE	2
2	54244	YOKE	2
3	63593	SHAFT-SPLINED	1
4	63594	TAPER PIN KIT	2
5	54235	CROSS KIT	2
6	55361	SNAP RING	8
7	63440	GREASE ZERK	2
8	63472	PIN-ROLL	1

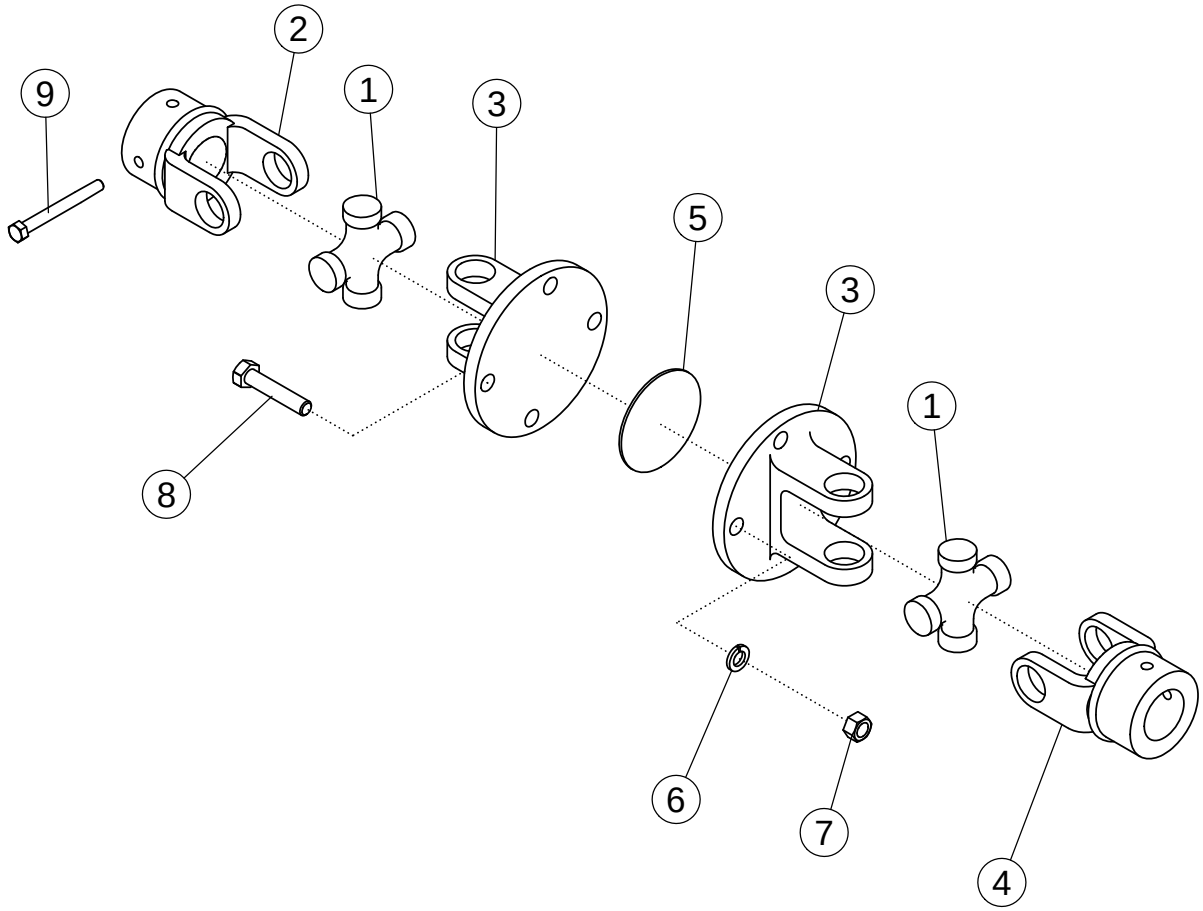
2
9
1
3
5
3
1
8
6
7
4

COUPLER-UNIVERSAL JOINT #68443

ITEM	PART NO.	DESCRIPTION	QTY
1	54235	CROSS KIT	2
2	68731	YOKE-COUPLER TAPER PIN 1.750	1
3	68780	FLANGE-YOKE COUPLER	2
4	68732	YOKE COUPLER 1.750	1
5	68781	PLATE-LINER COUPLER	1
6	68591	WASHER-LOCK: M14	4
7	68444	NUT-HEX: M14	4
8	69019	BOLT-HEX: M14 X 2.0 X L50 CL8.8 ZP	4
9	68782	KIT-TAPER PIN 1.750	1

69055 SNAP RING PLIERS

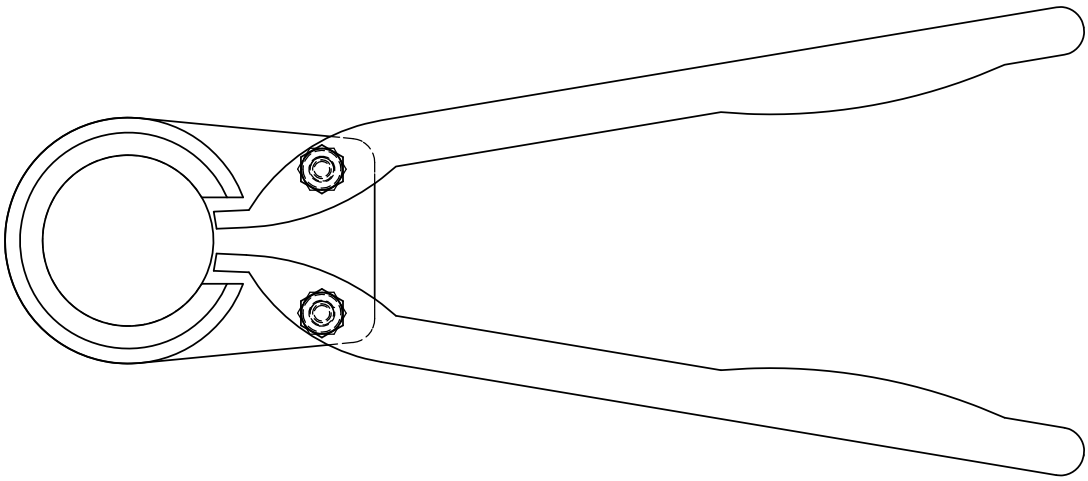

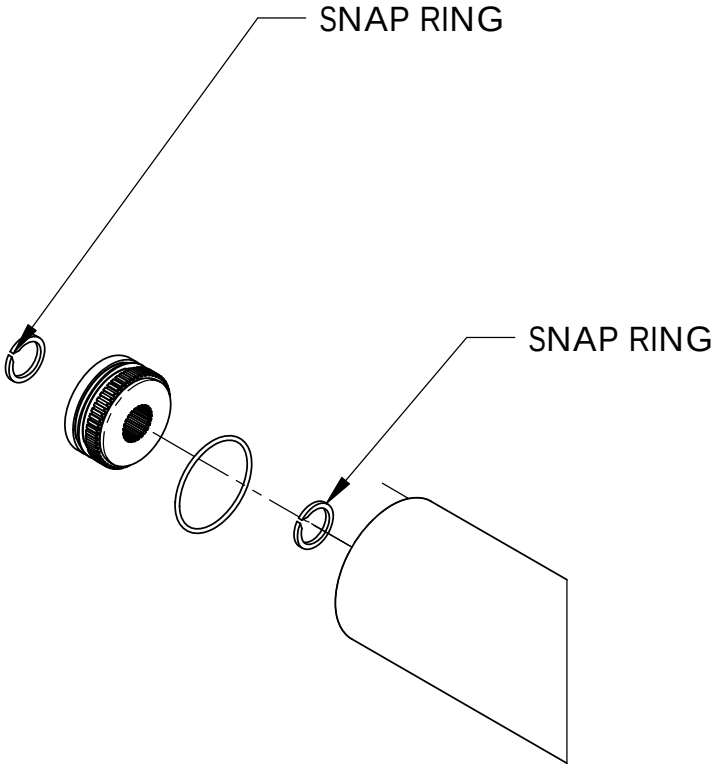

SHAFT REMOVED FOR CLARITY

THIS PAGE
INTENTIONALLY
LEFT BLANK

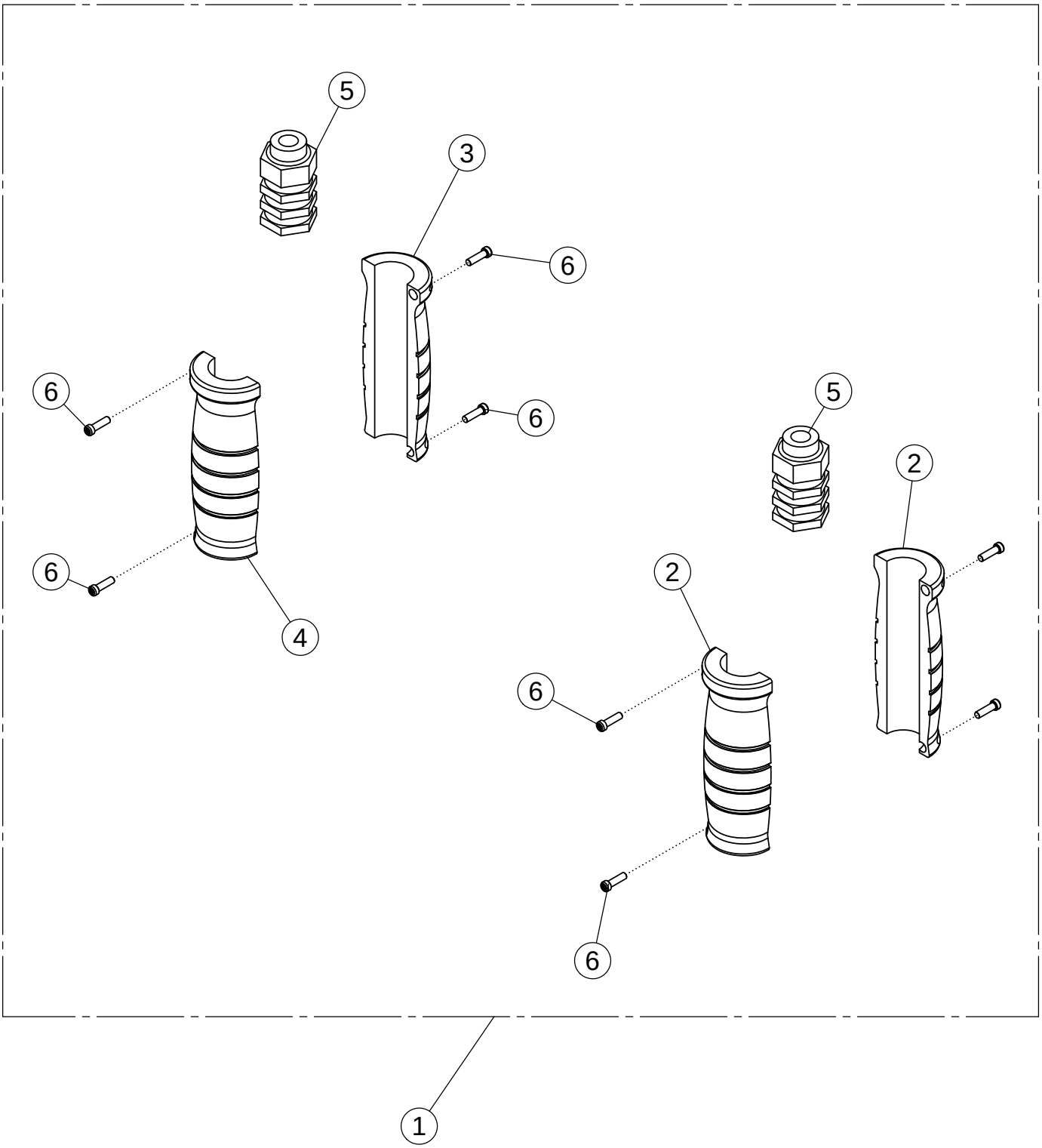
5
3
6
6
6
6
5
2
6
2
4
6
6
1

HYDRAULIC LABEL ASSY

ITEM	PART NO.	DESCRIPTION	QTY
1	301920*	HYD LABEL: .50 ORANGE/GRAY SET	1
	301902*	HYD LABEL: .50 BLUE/GRAY SET	
	301917*	HYD LABEL: .50 YELLOW/GRAY SET	
	301914*	HYD LABEL: .50 GREEN/GRAY SET	
	301911*	HYD LABEL: .50 BLACK/GRAY SET	
	301908*	HYD LABEL: .50 RED/GRAY SET	
	302230*	HYD LABEL: .50 RED/GREEN SET	
	302226*	HYD LABEL: .50 BLACK/ORANGE SET	
	302227*	HYD LABEL: .50 BLUE/YELLOW SET	
	301923*	HYD LABEL: .75 GREEN/GRAY SET	
	301928*	HYD LABEL: .75 YELLOW/GRAY SET	
2		HYD LABEL: .50 HALF EXTEND	2
		HYD LABEL: .75 HALF EXTEND	
3		HYD LABEL: .50 HALF RETRACT	1
		HYD LABEL: .75 HALF RETRACT	
4		HYD LABEL: .50 GRAY HALF RETRACT	1
		HYD LABEL: .75 GRAY HALF RETRACT	
5		HYD LABEL: .50 CORE M & F O-RING	2
		HYD LABEL: .75 CORE M & F O-RING	
6		HYD LABEL: SET SCREW	8

* COMES WITH ITEMS 2 THRU 6